1976–2014
38
YEARS OF EXCELLENCE
David Sarafan, Inc.

2014

DAVID SARAFAN INC.

PARTS FOR
HARLEY DAVIDSON MOTORCYCLES

9280 Winding Woods Dr.
Lake Worth, Fl 33467
www.davidsarafan.com

Tel. (561) 847-4471
Cell (505) 603-2303
Fax (561-) 355-0607
eMail: dsinc07@comcast.net

New Parts for Harley - Davidson Civilian and Military Models

ASP 70
DAMN IT
USE
SIGNALS

TERMS AND SALES POLICIES

RETURNS:
If you have a part to return, it must be done within 30 days of purchase date. A sales receipt must accompany it. You do not have to write or call for a return number. Just please explain why the part is being returned and tell us if you want a replacement.
NO COD'S will be accepted.

ADJUSTMENTS :
No labor claims of any kind will be considered. No adjustment will be made for more than the purchase price at the time of delivery. Freight will not be refunded.

PRICES :
Please check our current price sheet. Prices subject to change without written notice.

DELIVERY :
When possible, orders will be shipped complete on the day given or received. They will be processed according to buyer's instructions. Short items will either be back ordered or cancelled and marked on the invoice.

All orders will be shipped COD unless payment is received with order.

FORWARD
READ CAREFULLY :
The term "Harley-Davidson" is used in this context for reference only, some part numbers used and/or mentioned are used for this purpose. Our intention is that our catalog and parts carried will be used on customer's Harley-Davidson motorcycle. No products carried in our catalog are are made with the permission of Harley-Davidson Motor Co., Inc.

WARRANTY:
David Sarafan Inc., makes no warranty as to products distributed by us, express or implied, including without limitation, any warranties of merchant ability and fitness for a particular purpose. If the manufacturer has a written warranty, it will be included with the item you purchased. David Sarafan Inc. is not a manufacturer of any products in this catalog. David Sarafan Inc. is a distributor of motorcycle products only. Any changes arising from the design or manufacturing of any item is the sole responsibility of the manufacturer.

QUESTIONS AND ANSWERS:
If any problem should come up, please feel free to call. If you have a technical question, direct your inquiry to the Parts Dept.

LOCAL LAWS AND CODES - PLEASE NOTE:
Please consult local laws in your state or area concerning lights, frame modification, exhaust modification, or any modification whatsoever. We make no claims that the original equipment manufacturer recommends that you modify any motorcycle.

CONDITIONS OF SALE

1. We reserve the right to change unit measures and prices when necessary. Products produced. Overseas are affected by currency exchange.
2. Defective products exchanged or credited only.
3. No Cash Refunds on product returns.
4. Orders refused or returned to us as undelivered freight and C.O.D. charges will be charged on next order.
5. No reimbursement for labor given.

Large Stock of Original and Reproduction parts available for all Models - Flatheads and Overhead - `45, `61, `74s & `80s

All items in limited quantity
Many items not listed Please call or write your needs
Is our file information correct for your business?

- Dealer Number/Zip Code
- Correct Name
- Correct Shipping Address

If Not, let our office know

DAVID SARAFAN, INC.
PARTS FOR
HARLEY DAVIDSON MOTORCYCLES

9280 Winding Woods Dr.
Lake Worth, Fl 33467
www.davidsarafan.com

Tel. (561) 847-4471
Cell (505) 603-2303
Fax (561-) 355-0607
eMail: dsinc07@comcast.net

SPECIAL EDITION

THE LIBERATORS

MILITARY HARLEY-DAVIDSON MOTORCYCLES

CIRCA 1939-1952

COMPILED BY

DAVID SARAFAN

SR

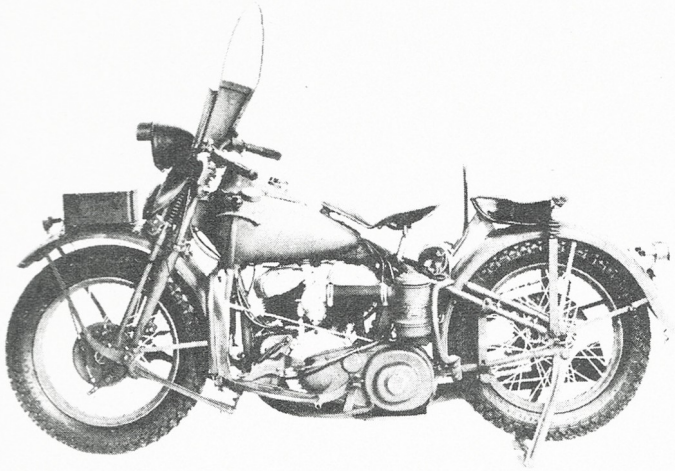

LEFT VIEW
MODEL
1942 WLC
MOTORCYCLE

LEFT VIEW
MODEL
1943 WLC
MOTORCYCLE
(EXPORT)

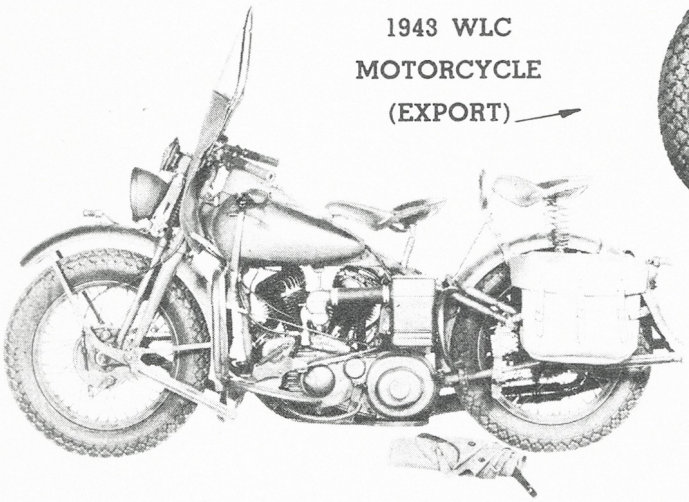

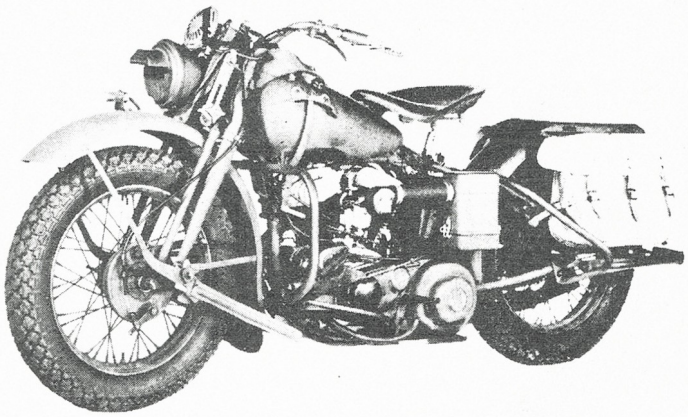

LEFT VIEW
MODEL
1943 WLC
MOTORCYCLE
(DOMESTIC)

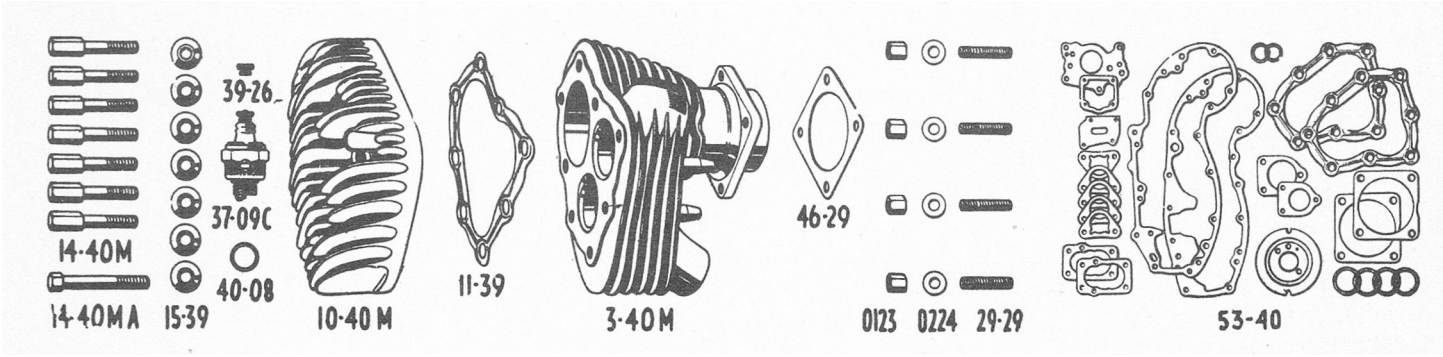

OLD NUMBER	NEW NUMBER	DESCRIPTION	PRICE
9-40M/10-40M	16692/16695-40R#5	HEADS ALUMINUM FITS ALL 45CI 1940-1952 #5	$499.95
	16692/16695-40R#6	HEADS ALUMINUM FITS ALL 45CI 1940-1952 #6	$499.95
2-40M	16469-40	FRONT CYLINDER	$285.00
3-40M	16470-40	REAR CYLINDER	$285.00
SET		FRONT AND REAR CYLINDERS	$500.00
11-39	16768-39R	HEAD GASKET,COPPER,36-73 45" (PR)	$21.95
11-39	16768-39R/PR/TEF	HEAD GASKETS BLUE TEFLON FITS 45CI 1939-1973 (PR)	$19.95
14-40M	16811-40	HEAD BOLT SHORT PARK	$5.99
14-40MA	16812-40	HEAD BOLT LONG PARK	$5.99
KIT	9705-18-45	HEAD BOLT SET PARK	$80.99
15-39	16822-39	HEAD BOLT WASHER PARK	$1.99
KIT	16822-39	HEAD BOLT WASHER KIT PARK	$30.99
29-29	16830-29	CYLINDER BASE STUD PARK	$1.99
0123	7804	CYLINDER BASE NUT PARK	$1.37
0224	6395	WASHER PARK	$0.49
46-29	16775-29	CYLINDER BASE GASKETS 45CI FLATHEAD	$2.49
53-40	17026-40	COMPLETE ENGINE GASKET KIT FITS 1940-1973 45CI ALL	$61.99

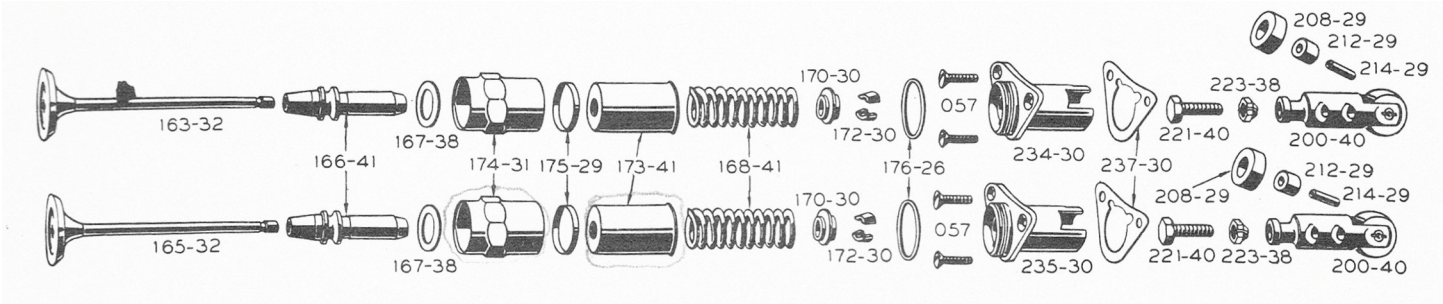

OLD NUMBER	NEW NUMBER	DESCRIPTION	PRICE
163-32	18070-32	VALVE, INTAKE NITRIDE FINISH FITS 1932-1973 45CI	$20.95
165-32	18080-32	VALVE, EXHAUST NITRIDE FINISH FITS 1932-1973 45CI	$21.99
166-41	18176-41	VALVE GUIDE 45" ALL MODELS STANDARD OD	$17.95
166-41A	18176-41R/+.001	VALVE GUIDE 45" ALL MODELS +.001 OD	$17.95
168-41	18201-41 KIT	VALVE SPRING KIT WITH COLLARS AND KEEPERS	$51.99
172-30	18228-30	VALVE KEY (SOLD AS SET)	$13.99
173-41	2717-20	VALVE COVER SET	$96.00
200-40	18490-29	TAPPET ASSEMBLY STD FITS ALL 45CI MOTORS (EA)	$66.99
	18490-29+.005	TAPPET ASSEMBLY +.005 FITS ALL 45CI MOTORS (EA)	$66.99
	18490-29+.010	TAPPET ASSEMBLY +.010 FITS ALL 45CI MOTORS (EA)	$66.99
208-29	18534-29A	TAPPET ROLLER KIT (4 PCS)	$46.99
221-40	18556-40/SET	TAPPET SCREW WITH NUT FITS ALL FLAT HEADS 1940-	$19.99
057	057	TAPPET GUIDE SCREW	$1.09
237-30	18631-30	TAPPET BASE GASKET FITS BIG TWIN, 45" SIDE VALVE	$1.49

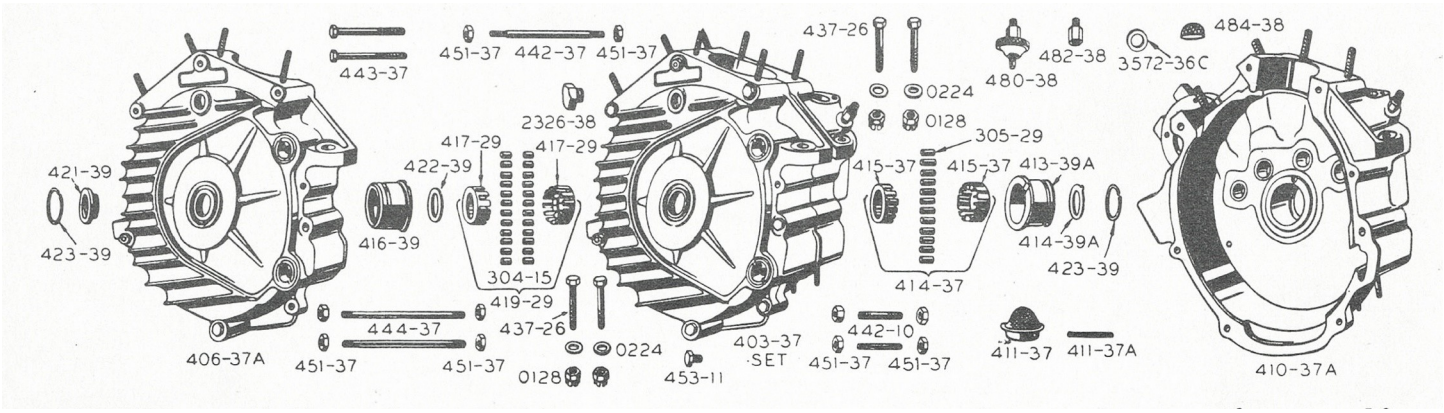

OLD NUMBER	NEW NUMBER	DESCRIPTION	PRICE
403-37	24511-37	SET OF CRANK CASES	
411-37	2704-3	CRANK CASE OIL STRAINER KIT INCLUDES PIN	$9.99
413-39A	24585-39	CASE BUSHING RIGHT STD	$57.99
24586-39	24586-39	CASE BUSHING RIGHT +.002	$57.99
24587-39	24587-39	CASE BUSHING RIGHT +.005	$57.99
24588-39	24588-39	CASE BUSHING RIGHT +.010	$57.99
414-39A	24692-39	GEAR SIDE BEARING WASHER	$4.99
305-29	9241	RIGHT SIDE ROLLER BEARING (12) STD	$10.99
305-29D	9242	RIGHT SIDE ROLLER BEARING (12) +.0002	$10.99
305-29F	9243	RIGHT SIDE ROLLER BEARING (12) +.0004	$10.99
305-29H	9244	RIGHT SIDE ROLLER BEARING (12) +.0006	$10.99
305-29KA	9245	RIGHT SIDE ROLLER BEARING (12) +.0008	$10.99
305-29MA	9246	RIGHT SIDE ROLLER BEARING (12) +.001	$10.99
416-39	24610-39	CASE BUSHING LEFT STD	$57.99
24611-39	24611-39	CASE BUSHING LEFT +.002	$57.99
24612-39	24612-39	CASE BUSHING LEFT +.005	$57.99
304-15	9321	LEFT BEARING ROLLER (24) STD	$13.95
304-15D	9322	LEFT BEARING ROLLER (24) +.0002	$13.95
304-15F	9323	LEFT BEARING ROLLER (24) +.0004	$13.95
304-15H	9324	LEFT BEARING ROLLER (24) +.0006	$13.95
304-15KA	9325	LEFT BEARING ROLLER (24) +.0008	$13.95
304-15MA	9326	LEFT BEARING ROLLER (24) +.001	$13.95
421-39	24775-39	SPROCKET SHAFT BEARING END	$16.99
422-39	24691-39	SPROCKET SHAFT BEARING WASHER	$3.59
423-39	24701-39	BEARING SPRING RING	$1.59
437-26	4379	MOTOR FASTENING BOLT REAR	$5.59
0128	7809	CAST'LD NUT PARKERIZED 3/8-24 N.F.x 15/32 x 9/16"	$1.99
0224	6395	PLAIN STEEL WASHER PARKERIZED 3/8 x 13/16" x 1/16"	$0.49
9626-26	9626-19	MOTOR FASTENING BOLT KIT LOWER PARK	$29.99
0292	534	COTTER PIN PARKERIZED 3/32 x 1" PARK	$0.16
442-10	24811-10	CRANKCASE STUD 1/4" X 1 - 5/8" PARKERIZED	$3.99
442-37	24812-37	CASE STUD PARK	$3.99
443-37	4080	CASE BOLT PARK	$3.99
444-37	24813-37	CASE STUD PARK	$3.99
451-37	7698	HEXAGON NUT PARKERIZED 1/4-24 N.S. x 1/4 x 1/2"	$0.99
453-11	700	MOTOR CASE DRAIN PLUG PARK	$4.29
2326-38	704	TIMING PLUG PARK	$5.99
480-38	26550-38	FLAT HEAD OIL PRESSURE SWITCH	$24.99
3572-36C	6440	OIL PRESSURE SWITCH WASHER BRASS	$0.49

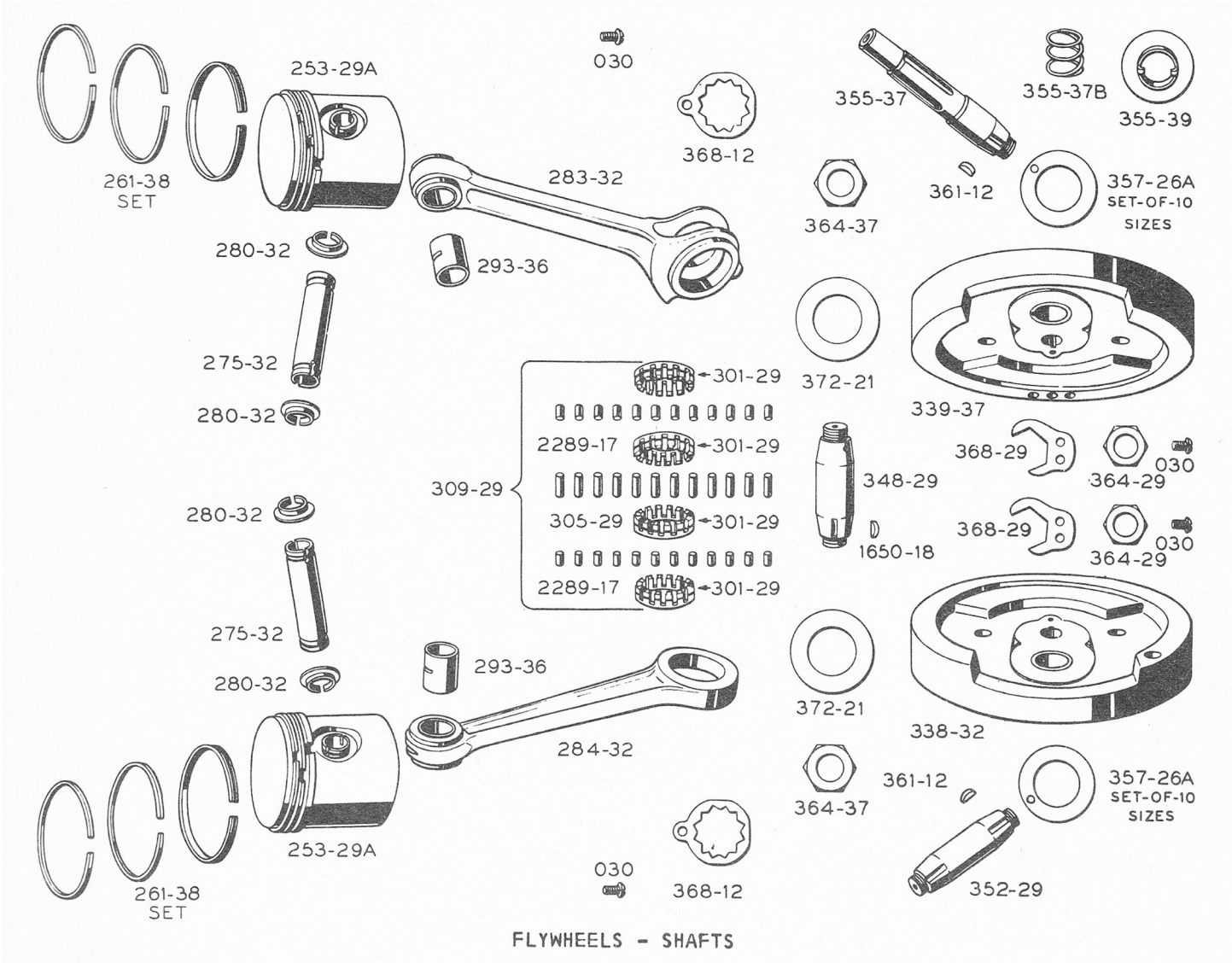

FLYWHEELS - SHAFTS

OLD NUMBER	NEW NUMBER	DESCRIPTION	PRICE
253-29A	22251-29	PISTON AND RING SET (2) STD	$132.99
253-29C	22253-29	PISTON AND RING SET (2) +.010	$132.99
253-29D	22254-29	PISTON AND RING SET (2) +.020	$132.99
235-29E	22255-29	PISTON AND RING SET (2) +.030	$132.99
253-29F	22256-29	PISTON AND RING SET (2) +.040	$132.99
253-29G	22257-29	PISTON AND RING SET (2) +.050	$132.99
253-29H	22258-29	PISTON AND RING SET (2) +.060	$132.99
253-29I	22259-29	PISTON AND RING SET (2) +.070	$132.99
E-825-080	SPECIAL	PISTON AND RING SET (2) +.080	$132.99
E-825-090	SPECIAL	PISTON AND RING SET (2) +.090	$132.99
289-32	24275-32	CONNECTING ROD SET	$284.99
293-31	293-31	PISTON PIN BUSHING STD EACH	$11.99
293-31B	293-31B	PISTON PIN BUSHING +.002 EACH	$11.99
293-31C	293-31C	PISTON PIN BUSHING +.005 EACH	$11.99
2289-17	9241/9301	ROD ROLLER SETS LONG AND SHORT STD	$13.95
2289-17D	9242/9302	ROD ROLLER SETS LONG AND SHORT +.0002	$13.95
2289-17F	9243/9303	ROD ROLLER SETS LONG AND SHORT +.0004	$13.95
2289-17H	9244/9304	ROD ROLLER SETS LONG AND SHORT +.0006	$13.95
2289-17KA	9245/9305	ROD ROLLER SETS LONG AND SHORT +.0008	$13.95
2289-17MA	9246/9306	ROD ROLLER SETS LONG AND SHORT +.001	$13.95

OLD NUMBER	NEW NUMBER	DESCRIPTION	PRICE
331-37	23901-37	SET OF FLYWHEELS	$599.99
348-29	23960-29A	CRANK PIN	$54.99
352-29	24000-29	MOTOR SPROCKET SHAFT	$69.99
355-37	24005-37	GEAR SHAFT	$109.99
355-37B	24699-37	SEAL RING SPRING	$1.59
355-39	24696-39	GEAR SHAFT BEARING SEAL RING	$16.99
357-26A	24060-26	FLYWHEEL THRUST WASHER SET	$56.99
361-12	23985-12	SPROCKET AND GEAR SHAFT KEY	$1.49
1650-18	23985-18	CRANK PIN KEY	$0.99
368-12	23982-12	SHAFT NUT LOCK WASHER	$1.79
368-29	24016-29	LOCK TAB	$0.99
030	030	LOCK WASHER SCREW	$0.49
372-21	23972-21	FLYWHEEL STEEL WASHERS (PR)	$16.99

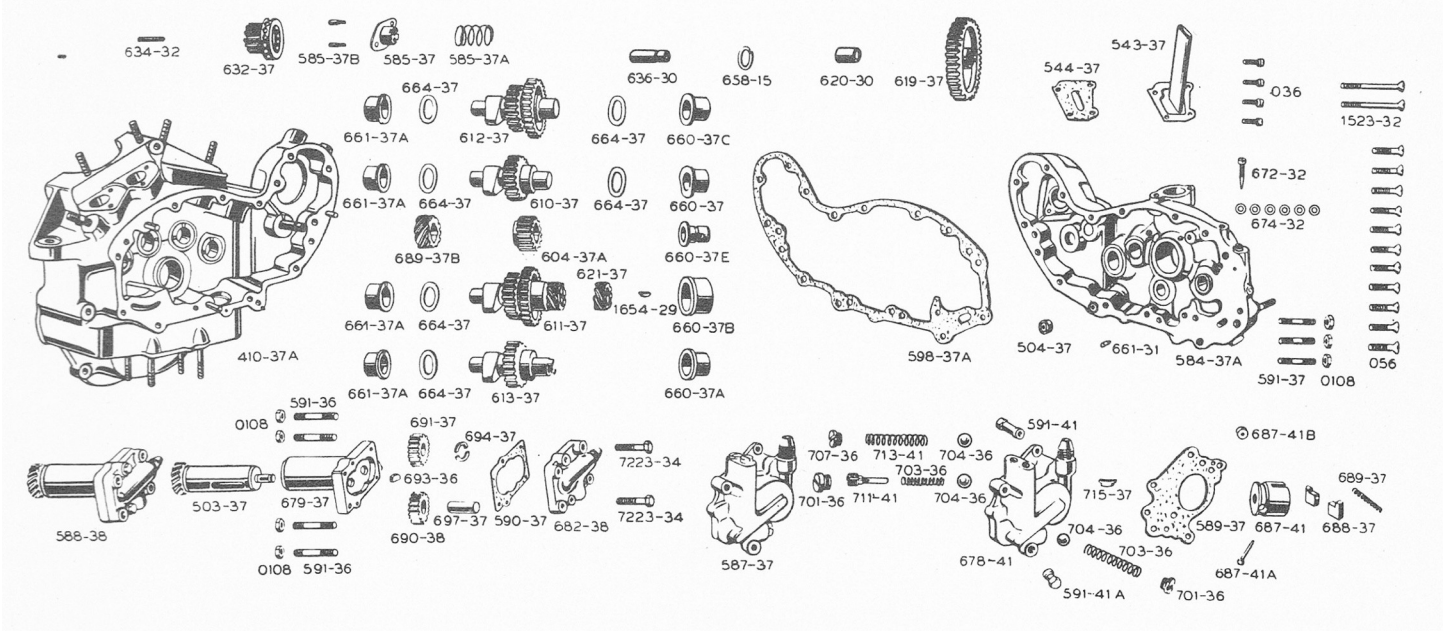

OLD NUMBER	NEW NUMBER	DESCRIPTION	PRICE
503-37	26331-37	BREATHER VALVE WITH KEY	$39.99
504-37	25350-37	GEAR CASE BREATHER VALVE	$29.99
504-39	26343-39	SCAVANGER PUMP SCREEN	$3.19
543-37	24912-37	RELIEF PIPE	$39.99
543-37A	24910-37	CHAIN OILER PIPE	$13.99
544-37	24921-37	RELIEF PIPE GASKET	$1.99
036	1202	FILLISTER HEAD SCREW PARKERIZED 10-32 N.F. x 1/2	$0.49
584-37A	25201-37	GEAR COVER	499.95
585-37	25281-37	BREATHER OIL SEPARATOR SEAL RING	$39.99
585-37A	25287-37	SEAL RING SPRING	$1.79
587-37	26203-37	OIL PUMP FEED ASSEMBLY	$185.99
588-38	26205-38	OIL SCAVENGER PUMP AND BREATHER VALVE	$351.99
589-37	23244-37	OIL FEED PUMP GASKET	$1.99
590-37	26246-37	OIL SCAVENGER PUMP BASE ABD COVER GASKET	$1.99
591-36	24819-36	OIL PUMP MOUNT STUD PARK 1/4" X 1 - 11/16"	$1.99
591-37	24819-37	OIL PUMP MOUNT STUD PARK 1/4" X 1 - 11/32"	$1.49
591-41	24830-41	OIL PUMP MOUNTING STUD NUT SHORT PARK	$7.99
591-41A	24831-41	OIL PUMP MOUNTING STUD LONG PARK	$7.99

		CRANK CASE GEARS & COVER OIL PUMPS CONTINUED	
OLD NUMBER	NEW NUMBER	DESCRIPTION	PRICE
0108	7691	HEXAGON NUT PARKERIZED 1/4-24 N.S. x 5/32 x 7/16"	$0.99
598-37A	25226-37	CAM / GEAR COVER GASKET	$3.99
056	2341	OVAL COUNTERSUNK HEAD SCREW PARKERIZED 1/4-24 N.S. x 1-1/8	$1.39
604-37A	24011-37	PINION GEAR	$34.99
619-37	25776-37	IDLING GEAR	$78.99
SPECIAL	SPECIAL	SET OF CAMS AND GEARS	$608.99
620-30	25785-30A	IDLING GEAR BUSHING	$9.99
621-37	25851-37	TIMER DRIVE GEAR	$49.99
1654-29	25860-29	TIMER DRIVE GEAR KEY	$2.59
632-37	31071-37	GENERATOR DRIVE GEAR	$16.95
634-32	327	GENERATOR DRIVE GEAR PIN	$0.29
636-30	25788-30	IDLING GEAR STUD	$7.99
658-15	25810-15	SMALL GEAR STUD SPRING RING	$0.59
660-37	25595-37	CAM / GEAR COVER BUSHING	$18.99
660-37A	25590-37	CAM / GEAR COVER BUSHING	$16.99
660-37B	25588-37	CAM / GEAR COVER BUSHING	$17.99
660-37C	25586-37	CAM / GEAR COVER BUSHING	$19.99
660-37E	25593-37	CAM / GEAR COVER BUSHING	$14.99
661-31	271	COVER BUSHING PIN	$0.19
661-37A	25601-37A	CRANKCASE CAM GEAR BUSHING STD	$21.99
661-37B	25601-37A+.005	CRANKCASE CAM GEAR BUSHING +.005	$23.99
661-37C	25601-37A+.010	CRANKCASE CAM GEAR BUSHING +.010	$24.99
664-37	6769	CAM SHAFT WASHER .006	$0.99
689-37	26286-37	FEED PUMP SPRING	$1.19
693-36	26340-36	OIL FEED GEAR KEY	$2.09
694-37	26341-37	SCAVENGER GEAR SPLIT RETAINING WASHER	$1.79
701-36	26362-36	CHECK VALVE SPRING COVER SCREW	$7.90
703-36	26363-36	CHECK VALVE SPRING	$2.39
704-36	8866	CHECK VALVE BALL	$0.29
707-36	26367-36	PARKERIZED OIL PUMP BYPASS VALVE PLUG	$7.90
713-41	26373-41	OIL FEED PUMP RELIEF VALVE SPRING	$1.19
672-32	26383-32	CHAIN OILER ADJUSTER SCREW	$3.99
674-32	6170	CHAIN OILER ADJUSTING WASHER	$0.25
9663-22		OIL PUMP MOUNTING KIT PARK	$34.52

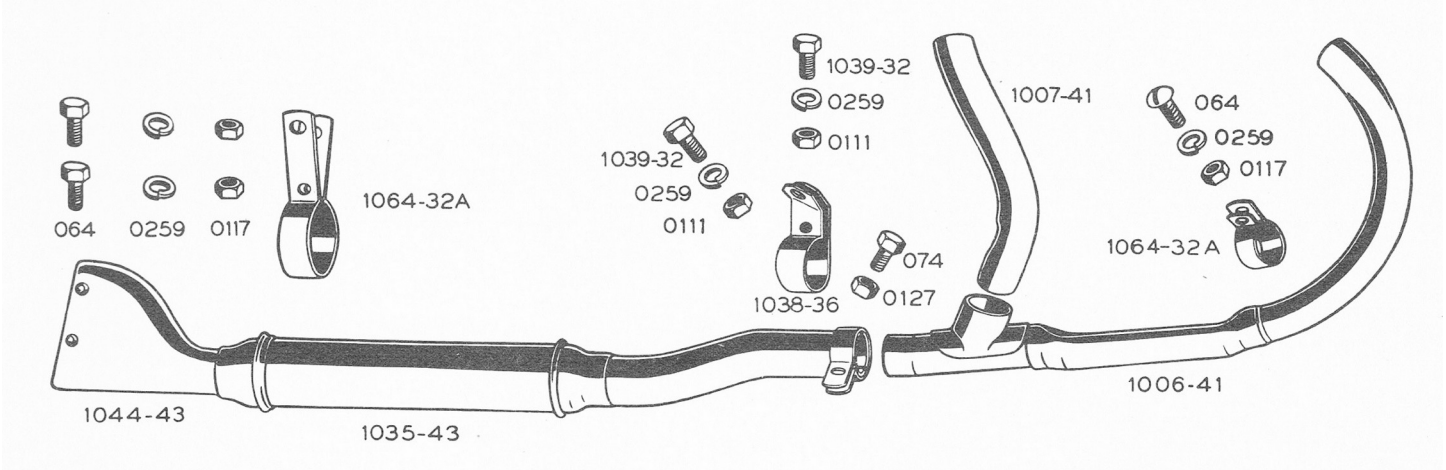

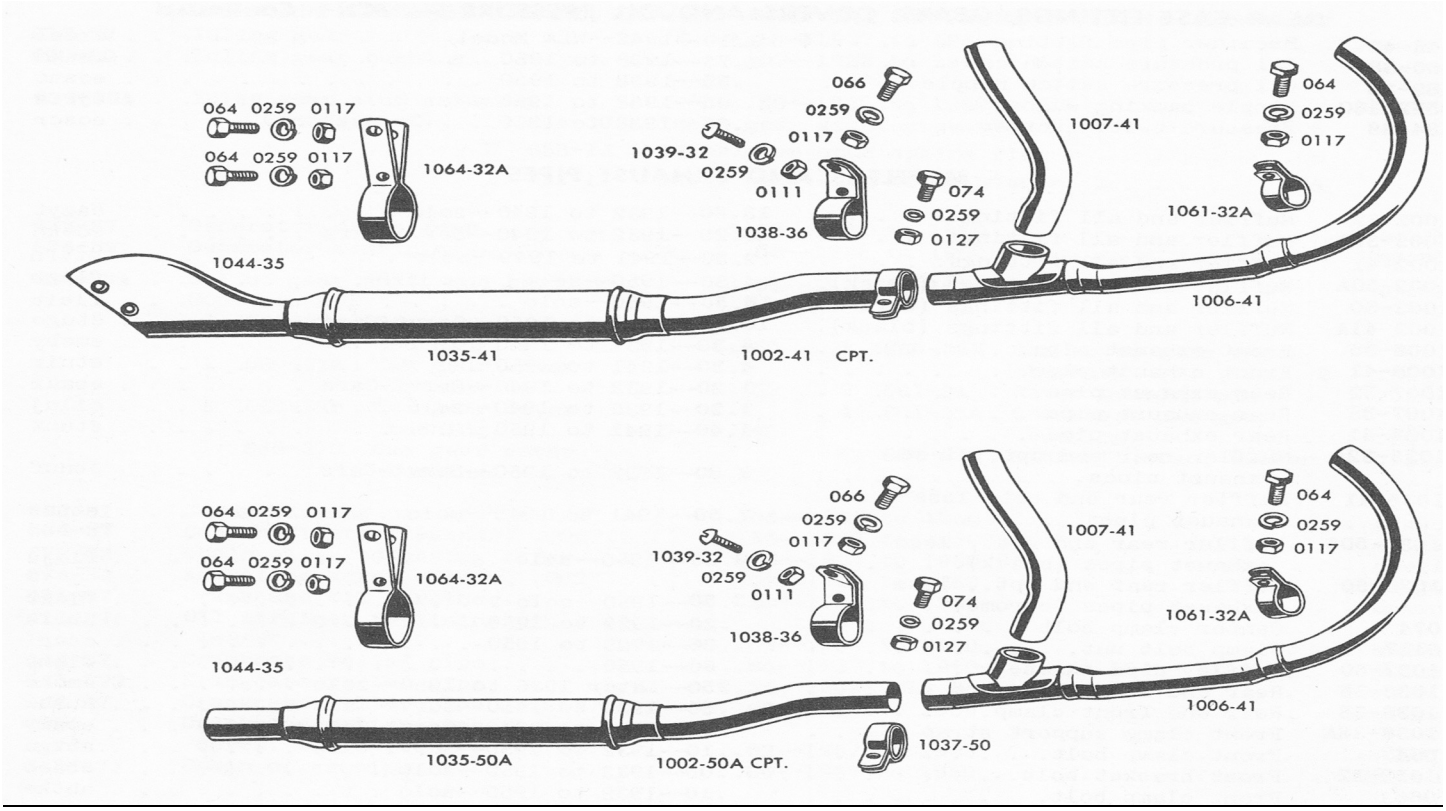

OLD NUMBER	NEW NUMBER	DESCRIPTION	PRICE
1002-32	1035-32	MUFFLER 1932-40 SOLO CIVILIAN BLACK	$86.99
1002-32	1035-32CH	MUFFLER 1932-1940 SOLO CIVILIAN CHROME	$121.99
1002-32	1035-34	MUFFLER 1934 SOLO CIVILIAN UP-SWEEP BLACK	$107.99
1002-32	1035-34CH	MUFFLER 1934 SOLO CIVILIAN UP-SWEEP CHROME	$137.99
1002-41	1035-32	MUFFLER 1941-1949 SOLO CIVILIAN BLACK	$86.99
1002-41	1035-32CH	MUFFLER 1941-1949 SOLO CIVILIAN CHROME	$121.99
1035-43M	1035-32M	MUFFLER 1940-1952 MILITARY BLACK	$109.99
65228-50	65228-50	MUFFLER 1950-1952 SOLO CIVILIAN BLACK	$101.99
65228-50	65228-50CH	MUFFLER 1950-1952 SOLO CIVILIAN CHROME	$120.99
1006-41	65452-41	FRONT EXHAUST PIPE BLACK	$66.99
1006-41	65452-41CH	FRONT EXHAUST PIPE CHROME	$69.99
1007-41	65490-41	REAR EXHAUST PIPE BLACK	$33.99
1007-41	65490-41	REAR EXHAUST PIPE CHROME	$36.99
1006/7-41	PIPE SET	FRONT AND REAR EXHAUST PIPE SET BLACK	$93.99
1006/7-41	PIPE SET	FRONT AND REAR EXHAUST PIPE SET CHROME	$119.99
074	4289	CENTER CLAMP BOLT PARK	$0.90
0127	7793	CLAMP BOLT NUT	$1.32
1037-50	65275-50	MUFFLER TO PIPE CLAMP 1941-1973 PARK	$7.65
1037-50	65275-50CH	MUFFLER TO PIPE CLAMP 1941-1973 CHROME	$12.85
1038-36	65278-36	REAR END FRONT CLAMP 1936-1973 PARK	$7.65
1038-36	65278-36	REAR END FRONT CLAMP 1936-1973 CHROME	$12.85
1039-32	2834	FRONT BRACKET BOLT PARK	$1.00
066	4000	HEXAGON HEAD BOLT PARKERIZED 5/16-24 N.F. x 1	$2.10
0111	7748	HEXAGON NUT PARKERIZED 5/16-18 N.C. x 17/64 x 1/2"	$1.05
0117	7752	HEXAGON NUT PARKERIZED 5/16-24 N.F.	$1.10
1061-32A	65510-32	FRONT PIPE CLAMP 1932-1952	$7.65
1061-32A	65510-32CH	FRONT PIPE CLAMP 1932-1952	$12.85
064	3974	HEXAGON HEAD BOLT PARKERIZED 5/16-24 N.F. x 3/4	$1.80
1932-73	CLAMP SET	MUFFLER CLAMP SET COMPLETE PARK	$23.99
1932-73	CLAMP SET	MUFFLER CLAMP SET COMPLETE CHROME	$39.99

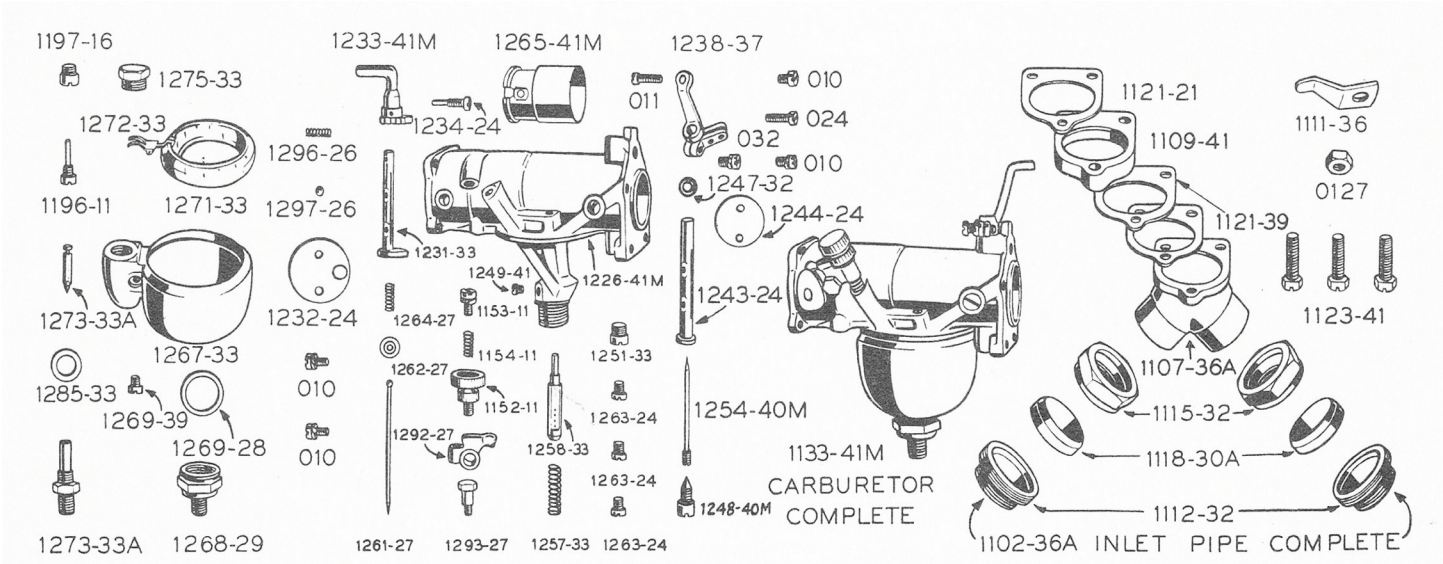

OLD NUMBER	NEW NUMBER	DESCRIPTION	PRICE
1102-36A	27011-36	INLET PIPE COMPLETE	$92.95
1107-36A	27024-36	INLET PIPE ONLY	$62.00
1109-41	27034-41	INLET PIPE EXTENSION	$25.95
1111-36	27432-36	CARBURETOR SUPPORT	$8.95
1111-36KIT	27432-36KIT	CARBURETOR SUPPORT KIT	$7.95
0127	7793	CARBURETOR SUPPORT NUT PARKERIZED 3/8-24 N.F. x 21/64 x 9/16	$1.37
1112-32	27038-32	INLET PIPE TO CYLINDER	$26.95
1115-32P	27051-32P	INLET PACKING NUT PARKERIZED PR	$26.95
1115-32C	27051-32C	INLET PACKING NUT CAD PR	$26.95
1118-30A	27058-30	INLET PACKING BUSHING BRASS	$9.95
1118-30PK	27057-30PEEK	INLET PACKING BUSHING PEEK PR	$40.00
1121-21	27410-21	INLET PIPE PAPER GASKET	$0.99
1121-39	27410-39	CARBURETOR INSULATING GASKET	$1.80
1123-39	27422-39	CARBURETOR FASTENING BOLT EACH	$4.95
1123-39KIT	27422-39KIT	CARBURETOR FASTENING BOLTS AND LOCK WASHER PARK	$13.99
1123-41	27423-41	CARBURETOR FASTENING BOLT EACH	$4.95
1123-41KIT	27423-41KIT	CARBURETOR FASTENING BOLTS AND LOCK WASHER PARK	$13.99
1133-41M	27122-41	LINKERT CARB 1 - 1/4" WITH 15/16" VENTURI REBUILT	$500.00
1231-33	27215-33	AIR INTAKE SHAFT	$26.79
010	993	AIR INTAKE SHAFT SCREW	$0.39
1232-24	27225-24	AIR INTAKE DISC	$23.95
1233-41M	27288-33	AIR INTAKE LEVER	$26.95
1234-24	27251-24	AIR INTAKE SCREW	$3.99
1238-37	27252-37	THROTTLE LEVER	$36.49
032	1206	THROTTLE LEVER LOCK SCREW FILLISTERPARKERIZED 10-24 N.C.	$0.50
024	1070	THROTTLE STOP SCREW PARKERIZED 8-32 X 3/4	$0.50
011	997	THROTTLE STOP LOCK SCREW	$0.39
1243-24	27275-24	THROTTLE SHAFT	$12.95
1244-24	27280-24	THROTTLE DISC	$18.95
1247-32	27291-32	THROTTLE SHAFT SPRING	$2.39
010	993	THROTTLE DISC SCREW	$0.39
1248-40M	27304-40	JET HOLE SCREW	$9.95

1249-41	27318-41	FIXED JET .052 HOLE	$23.95
1251-33	27325-33	IDLE PASSAGE PLUG	$4.00
1242-40M	1242-40M	HIGH SPEED NEEDLE VALVE FIXED	$2.99
1254-27	27297-27	HIGH SPEED NEEDLE VALVE ADJUSTABLE	$30.00
1257-33	27330-33	NOZZLE RETAINER SPRING	$1.29
1258-33	27331-33	MAIN NOZZLE	$29.09
1261-27	27336-27 / 2696-5	LOW SPEED NEDDLE VALVE ASSEMBLY	$29.99
1262-27	27345-27	SPRING COLLAR	$10.99
1263-24	27327-24	DRILL PLUG	$5.99
1264-27	27349-27	NEEDLE VALVE SPRING	$0.99
1152-11	27350-11	NEEDLE VALVE ADJUSTING SCREW	NA
1153-11	27351-11	NEEDLE VALVE LOCK SCREW	$6.00
1154-11	27349-11	NEEDLE VALVE LOCK SPRING	$6.00
1265-41M	27364-41	VENTURI 15/16" FOR ALL 1 - 1/4" LINKERT CARBURETORS	$38.99
1267-24	27370-24	BOWL ASSEMBLY	$65.00
1267-33	27370-33	FLOAT BOWL	$49.99
1268-29	27375-29	BOWL LOCK NUT	$11.95
1269-28	27376-28	BOWL LOCK NUT GASKET	$2.09
1269-39	27377-39	BOWL DRAIN SCREW	$4.00
1269-39/SEAL	27377-39/SEAL	BOWL DRAIN SCREW SEAL	$1.40
1271-33	27380-33	FLOAT AND LEVER	$29.95
1271-33	27380-33	RUBBER DUCKY FLOAT	$40.00
27380-50	10030294	CARB REBUILD KIT INCLUDING FLOAT IMPORTED	$44.95
1272-33	27381-33	FLOAT LEVER	$19.95
1273-33A	27382-33	FLOAT VALVE AND SEAT STEEL	$24.95
1273-33AR	27382-33R	FLOAT VALVE AND SEAT RUBBER	$22.95
1196-11	27383-11	FLOAT LEVER PIN KIT	$15.99
1197-16	27384-16	FLOAT LEVER PIN BEARING	$6.00
1275-33	27390-33	BOWL CAP	$15.95
1285-33	27402-33	INLET NIPPLE WASHER	$0.99
1292-27	27395-27	NEEDLE VALVE LEVER	$29.95
1293-27	27397-27	NEEDLE VALVE LEVER SCREW	$10.99
1296-26	27405-26	FRICTION SPRING	$0.66
1297-26	27406-26	FRICTION BALL	$0.40

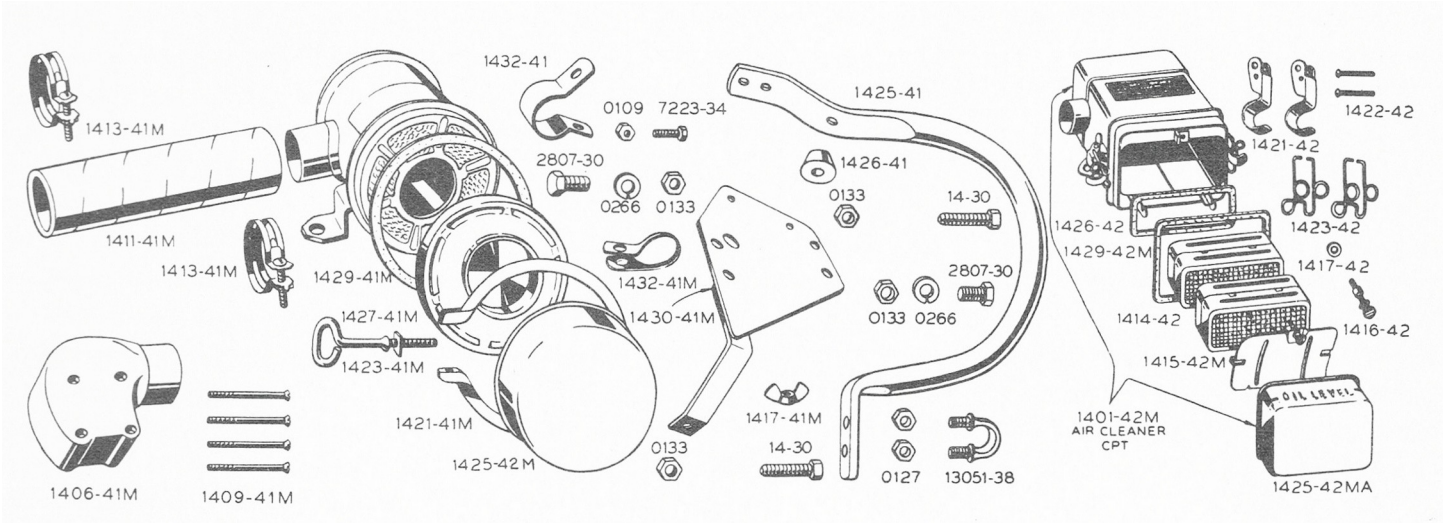

OLD NUMBER	NEW NUMBER	DESCRIPTION	PRICE
1401-42M	1401-42M	OIL BATH AIR CLEANER NOS but a little rusty	$225.00
1406-41M	29070-41	CONNECTION TO AIR CLEANER	$75.00
1409-41M	29080-41	CONNECTION TO CARBURETOR SCREW	$6.00
1411-41M	1411-41M	CONNECTING HOSE	$20.00
1413-41M	29085-41	CLAMPS FOR HOSE set of two	$35.00
1425-41	1425-41	AIR CLEANER GUARD WLC complete with mounting	$175.00
1426-41	1426-41	AIR CLEANER GUARD SPACER	N/A
2807-30	4620	MOUNTING BOLT	N/A
0133	7535	MOUNTING BOLT NUT	N/A
1430-41M	29087-41	MOUNTING PLATE	$40.00
1423-41	1423-41	PLATE TO FRAME CLAMP REAR	$10.00
1432-41M	29092-41	PLATE TO FRAME CLAMP	$10.00
7223-34	7223-34	FRAME CLAMP BOLT	$5.00
0109	7695	FRAME CLAMP BOLT NUT	$3.00
14-30	16804-30	REAR UPPER BOLT	$5.00
0133	7835	REAR UPPER BOLT NUT	$5.00
13051-38	91209-38	U BOLT FOR AIR CLEANER GUARD	$12.00
0127	7793	NUTS FOR U BOLT	$2.00
1421-41M	29109-41	BOTTOM PAN CLAMP	N/A
1423-41M	29110-41	BOTTOM PAN CLAMP SCREW	N/A
1424-42M	1424-42M	OIL CUP	N/A
1427-41M	29106-41	BAFFLE PLATE	N/A
1429-41M	29107-41	GASKET FOR JOINT	N/A
1414-42	29094-42	AIR CLEANER STRAINER	N/A
1415-42M	29097-42	BAFFLE PLATE	N/A
1416-42	29098-42	BAFFLE PLATE SCREW	N/A
1417-42	29099-42	BAFFLE PLATE SCREW WASHER	N/A
1421-42	29100-42	OIL CUP LATCH	N/A
1422-42	29101-42	OIL CUP LATCH RIVET	N/A
1423-42	29102-42	OIL CUP LATCH SPRING CLIP	N/A
1425-42MA	29103-42	OIL CUP	N/A
1426-42	29095-42	AIR STRAINER GASKET	N/A
1429-42M	29108-42	OIL CUP GASKET	N/A

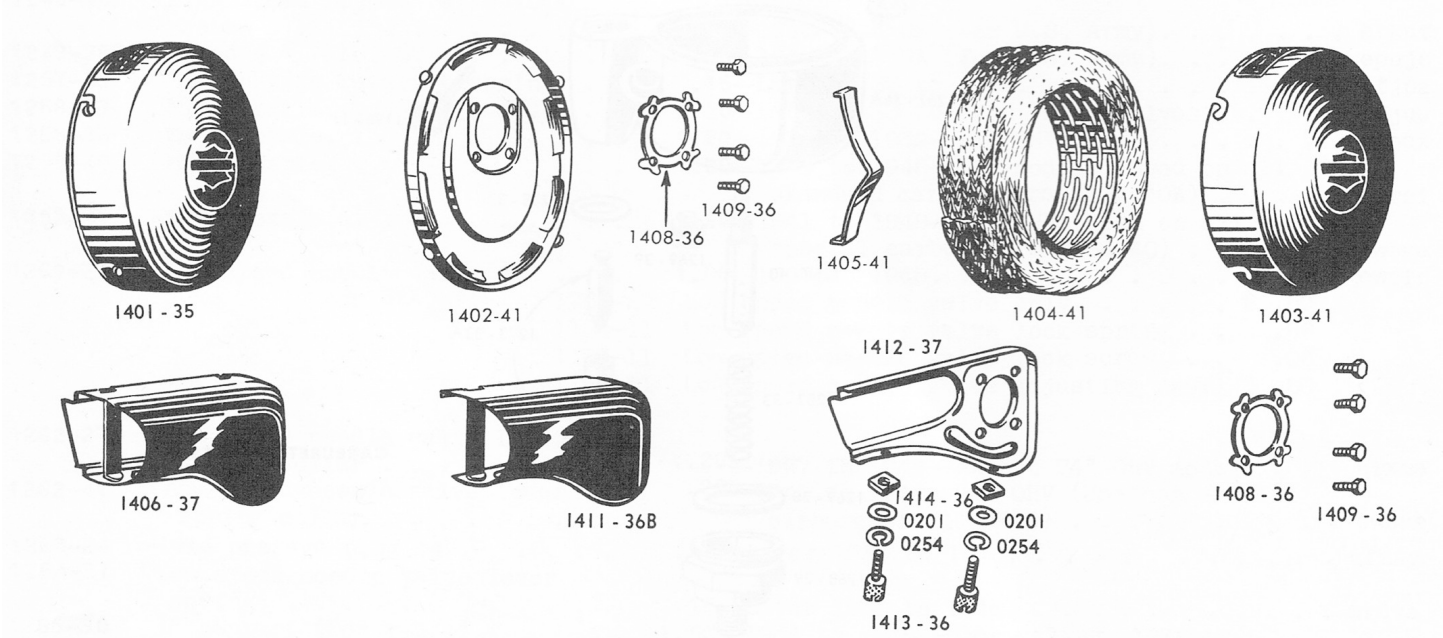

AIR INTAKE AND CLEANERS

OLD NUMBER	NEW NUMBER	DESCRIPTION	PRICE
1401-35	29002-35/6IN	6" AIRCLEANER ASSEMBLY CHROME COVER	$250.00
1401-35	29002-35/6IN	6" AIRCLEANER ASSEMBLY RAW COVER	$225.00
1401-35	29002-41/7IN	7" AIRCLEANER ASSEMBLY CHROME COVER	$267.00
1401-35	29002-41/7IN	7" AIRCLEANER ASSEMBLY RAW COVER	$237.00
1402-41	29020-41	AIR CLEANER BACKING PLATE PARKERIZED	$92.99
1404-35	29037-35	COPPER MESH ONLY	$11.99
1404-41	29036-41	AIR CLEANER COPPER MESH AND INNER SUPPOUT	$54.95
1405-41	29040-41	AIR CLEANER SPRING	$9.99
	29036-41/FOAM	FOAM REPLACEMENT AIR CLEANER FOR 7"	$19.99
	29036-41/K&N	PAPER K&N AIR CLEANER FOR 7”	$46.99
1403-35	27027-35/CH	6" AIR CLEANER COVER CHROME	$169.00
1403-35	27027-35/RW	6" AIR CLEANER COVER RAW	$159.00
1403-41	29030-41/CH	7" AIR CLEANER COVER CHROME	$169.00
1403-41	29030-41/RW	7" AIR CLEANER COVER RAW	$159.00
1406-37	29151-37	FLATHEAD AIR HORN	$62.00
1411-36B	29162-36	OHV AIR HORN	$47.00
1404-35	29027-35	AIR CLEANER MESH	$15.00
DPLATE		6" BRASS DATA PLATE	$34.00
DPLATE		6" STEEL DATA PLATE	$34.00
DPLATE		7" 500MI BRASS DATA PLATE	$34.00
DPLATE		7" 500MI STEEL DATA PLATE	$34.00
DPLATE		7" 1000MI BRASS DATA PLATE	$34.00
DPLATE		7" 1000MI STEEL DATA PLATE	$34.00
1408-36	29155-36	LOCK TAB AIR CLEANER BACKING PLATE	$7.20
1409-36	3625	LOCK TAB SCREW PARK	$2.25
1408-36/KIT	9682-5	PARKERIZED AIR CLEANER MOUNTING SCREW & LOCK KIT	$12.20
2666-5	2666-5	AIR CLEANER BACKING PLATE RIVET REPLACEMENT KIT	$12.00

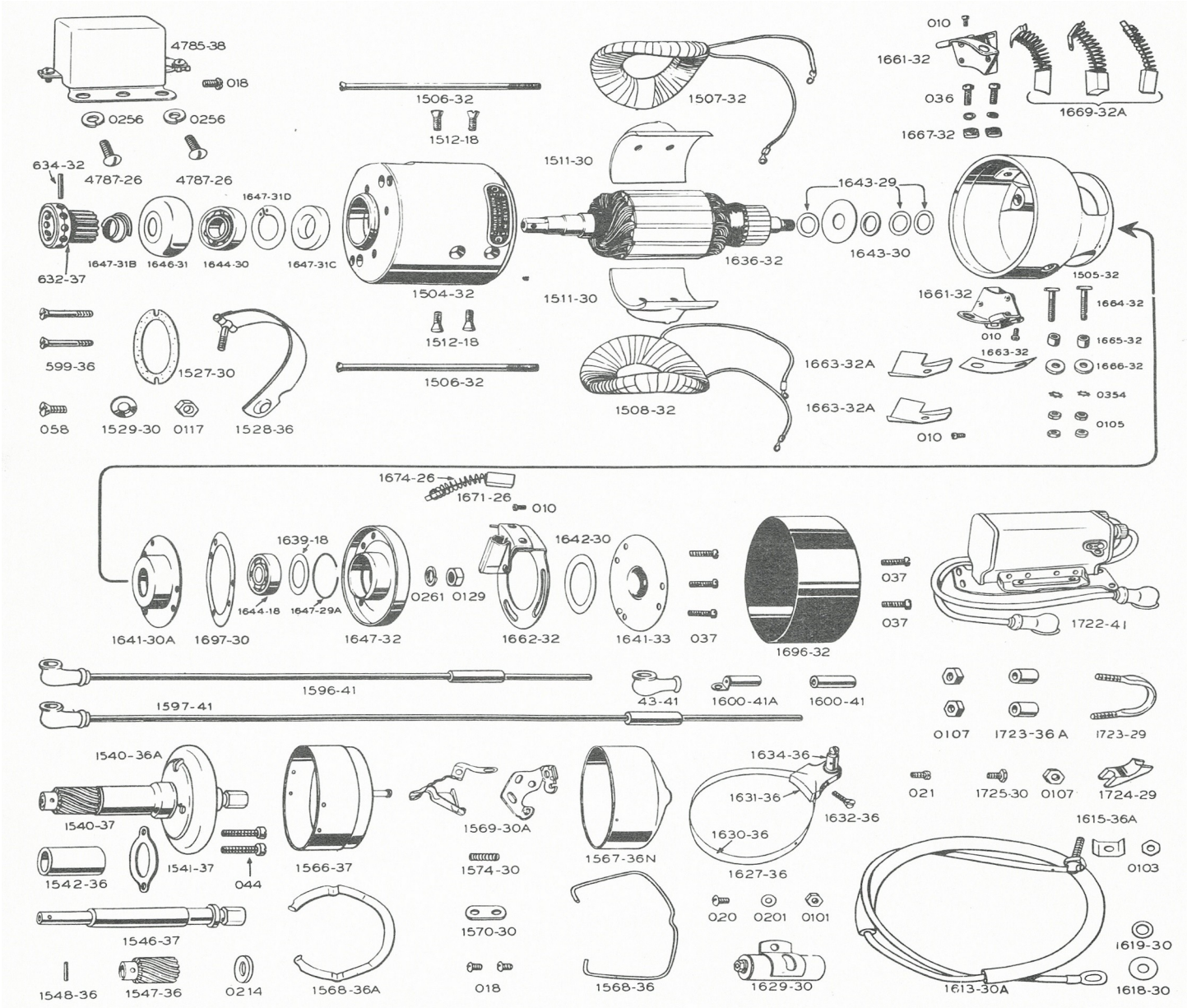

OLD NUMBER	NEW NUMBER	DESCRIPTION	PRICE
4785-38	74750-38	RELAY ASSEMBLY	$83.95
4785-38ELC	74750-38ELC	RELAY ASSEMBLY ELECTRONIC	$89.95
4787-26	2762W	RELAY MOUNTING BRACKET ROUND HEAD SCREW	$0.95
018	2626	8-32X1/4"ROUND HEAD,PARK	$0.99
GEN TAG	GEN TAG	GENERATOR DATA TAG BRASS	$29.95
GEN TAG	GEN TAG	GENERATOR DATA TAG STEEL	$29.95
1505-32	30132-32	RIGHT FRAME END	$77.99
1506-32	30012-32	FRAME SCREW (PR)	$15.95
1507/1508-32	30206-32	GENERATOR FIELD COIL SET	$152.95
1663-32A	30365-32	FIELD COIL INSULATION	N/A
1512-18	30280-18	POLE PIECE SCREW SET OF 4	$5.95
1523-32/PARK	2349	GENERATOR FASTENING SCREWS PARK	$5.95
1523-32/CAD	2349	GENERATOR FASTENING SCREWS CAD	$5.95
1527-30	30143-30	GENERATOR GASKET	$6.00
1528-30	30025-30	GENERATOR STRAP	$24.00
1529-30	30029-30	GENERATOR STRAP WASHER	$1.95
0117	7752	GENERATOR STRAP NUT	$1.09
058	1956	GENERATOR STRAP SCREW	$2.00

GENERATOR			
OLD NUMBER	NEW NUMBER	DESCRIPTION	PRICE
1636-32	30852-32	ARMATURE AND WINDING	$65.95
1639-18	30890-18	ARMATURE SHIM .018	$12.00
1641-30A	31020-30	OIL RETAINER INNER	N/A
1641-33	31022-33	OIL RETAINER OUTER	N/A
037	1210	OIL RETAINER SCREW	$0.50
1642-30	31015-30	BEARING HOUSING GASKET	$0.25
1643-30	6551	WASHER SMALL .072	$0.35
1644-18	9005	ARMATURE BEARING SMALL	$5.00
1644-30	9007	ARMATURE BEARING LARGE	$7.00
1646-31	31035-31	DRIVE END OIL DEFLECTOR	$7.95
1647-29A	31017-29	BEARING PLATE SPRING RING	N/A
1647-31D&C	30145-46A	OIL SEAL, ARMATURE	$6.15
1647-31B	31040-31	DRIVE END SPRING	$1.00
1647-31D	31045-31	DRIVE END SPRING RING	$8.00
0129	7789	ARMATURE SHAFT NUT	$1.50
1661-32	30351-32	MAIN BRUSH HOLDER	N/A
1662-32	30385-32	THIRD BRUSH HOLDER	$72.95
1663-32	30365-32	POSITIVE BRUSH HOLDER INSULATION	$14.00
1663-32A	30228-32	FIELD COIL TERMINAL INSULATION	$14.00
1664-32	30460-32	POSITIVE TERMINAL SCREW	$6.00
0105	7634	TERMINAL NUT SCREW	$0.49
1665-32	30463-32	TERMINAL SCREW BUSHING	$5.00
1666-32	6186	TERMINAL INSULATING WASHER	$4.00
4-838	KIT	COMPLETE KIT FOR INSULATION , SCREWS AND BUSHINGS	$9.99
036	1202	BRUSH PLATE SCREW	$0.50
1667-32	30367-32	NEGATIVE BRUSH HOLDER SCREW NUT	$6.00
1669-32A	30425-32	SET OF BRUSHES AND SPRINGS	$6.95
1671-26	30427-26	SMALL BRUSH AND SPRING	$3.29
010	993	BRUSH WIRE SCREW	$0.39
1696-32	30137-32	COMMUTATOR END COVER BLACK	$36.95
1696-32C	30137-32C	COMMUTATOR END COVER CHROME	$39.95
1697-30	30138-30	COMMUTATOR END COVER GASKET	$0.99
037	1210	COMMUTATOR END COVER SCREW	$0.50

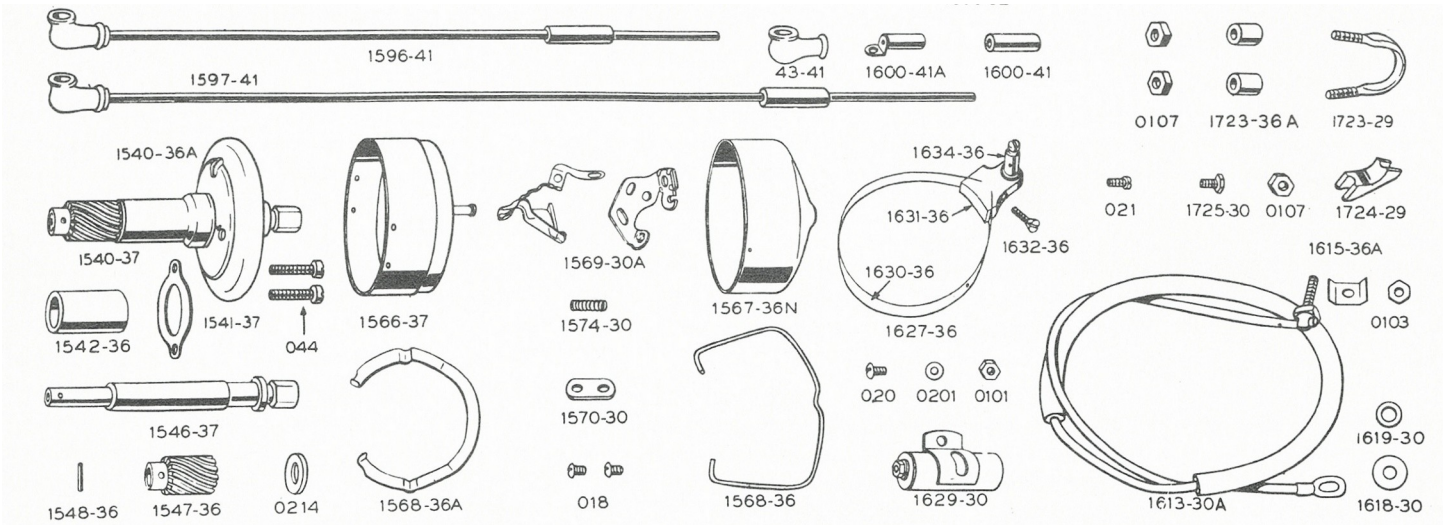

CIRCUIT BREAKER	AND COIL GROUP		
OLD NUMBER	NEW NUMBER	DESCRIPTION	PRICE
1541-37	32522-37	TIMER BASE GASKET	$.029
1542-36	32525-36	TIMER HOUSING BUSHING	$8.99
0214	6320	TIMER SHAFT WASHER	$0.39
044	1311	IGNITION TIMER TO MOTOR SCREW	$0.29
1566-37	32578-37	CIRCUIT BREAKER PLATE	$69.99
1567-36N	32589-36CAD	CIRCUIT BREAKER COVER CAD	$27.00
1567-36	32589-36PARK	CIRCUIT BREAKER COVER PARK	$27.00
1567-36	32589-36CHR	CIRCUIT BREAKER COVER CHROME	$12.00
1568-36	32592-36CAD	BREAKER COVER RETAINER CAD	$27.00
1568-36	32592-36PARK	BREAKER COVER RETAINER PARK	$27.00
1568-36	32592-36CHROME	BREAKER COVER RETAINER CHROME	$3.19
1568-36A	32585-36	BREAKER PLATE RETAINER	$22.99
1569-30A	32658-30	SET OF BREAKER POINTS	$9.95
1570-30	32666-30	CONTACT PLATE SPRING WASHER	$1.99
018	2626	CONTACT PLATE SCREW	$0.99
1574-30	32629-30	BREAKER SPRING	$5.00
1596/1597-41	SET	SPARK PLUG WIRE SET SHIELDED MILITARY POLICE	N/A
1596/1597-41	31966-36R	SPARK PLUG WIRE SET	$18.99
1613-30A	32690-30	CIRCUIT BREAKER TO COIL WIRE KIT	$9.95
0103	7608	LOW TENSION STUD NUT	$0.29
1627-36	32710-36	TIMER OPERATING STRAP ASSEMBLY	$44.99
1627-37A	32736-37	TIMER CONTROL BRACKET	$24.00
1629-30	32726-30	CONDENSER	$4.99
020	1052	CONDENSER SCREW	$0.49
1722-41	31602-30B	SPARK COIL 6V BLACK	$76.95
1722-41	31602-30C	SPARK COIL 6V CHROME	$78.95
1722-41	31602-30B	SPARK COIL 12V BLACK	$76.95
1722-41	31602-30C	SPARK COIL 12V CHROME	$78.95
1723-29	31735-29	SPARK COIL U BOLT	$10.95
0107	7688	U BOLT NUT	$1.09
1725-30	KIT	COIL MOUNTING KIT COMPLETE	$42.49

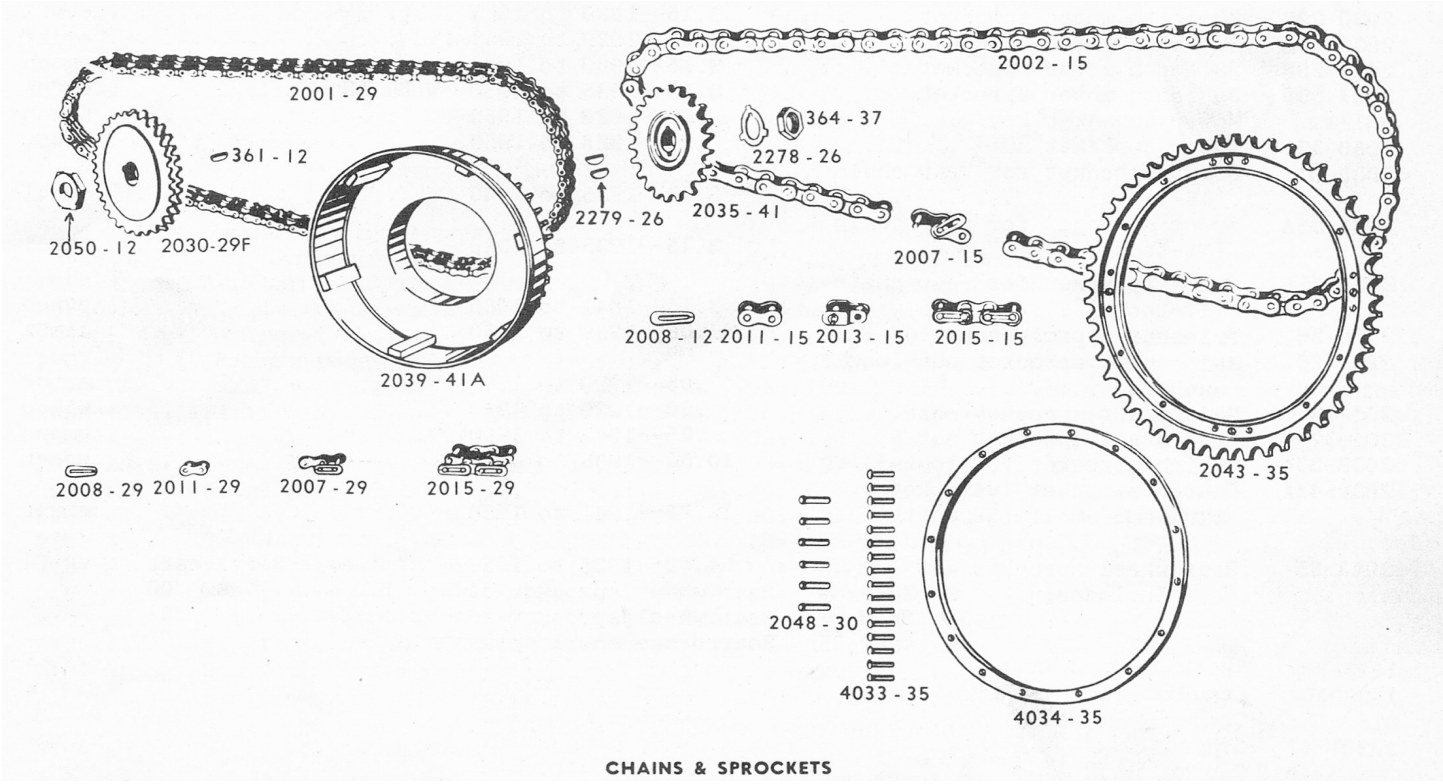

CHAINS & SPROCKETS

OLD NUMBER	NEW NUMBER	DESCRIPTION	PRICE
2001-29D	40005-29	DIAMOND FRONT CHAIN 100 LINKS	$49.99
2001-38D		DIAMOND FRONT CHAIN 96 LINKS (SERVI-CAR)	$50.00
2002-15D	40029-15A	DIAMOND STANDARD REAR CHAIN 110 LINKS	$59.99
2002-15XDL	40029-15E	DIAMOND HEAVY DUTY REAR CHAIN 110 LINKS	$86.99
2006-15/2008-12	40052-65	REAR CHAIN CONNECTING LINK AND SPRING CLIP	$2.99
2007-29A	40054-29	CONNECTING LINK FRONT CHAIN	N/A
2008-29A	40055-29	CONNECTING LINK SPRING FRONT CHAIN	N/A
2010-15	40076-15	ROLLER BLOCK REAR CHAIN	N/A
2011-29A	40079-29	ROLLER BLOCK FRONT CHAIN	N/A
2013-15	40092-15	OFFSET REPAIR LINK REAR CHAIN	N/A
2014-15	40093-15	DOUBLE REPAIR LINK REAR CHAIN	N/A
2014-29	40096-29	DOUBLE REPAIR LINK FRONT CHAIN	N/A
2030-29C	40225-29	17T MOTOR SPROCKET	$39.99
2030-29D	40230-29	22T MOTOR SPROCKET	$39.99
2030-29	40232-29	24T MOTOR SPROCKET	$39.99
2030-29A	40234-29	26T MOTOR SPROCKET	$39.99
2030-29E	40235-29	27T MOTOR SPROCKET	$39.99
2030-29B	40237-29	29T MOTOR SPROCKET	$39.99
2030-29F	40238-29	30T MOTOR SPROCKET	$39.99
2029-29A	40240-29	32T MOTOR SPROCKET	$39.99
2031-29B	40241-29	33T MOTOR SPROCKET	$39.99
2031-35	40242-35	34T MOTOR SPROCKET	$39.99
361-12	23985-12	MOTOR SPROCKET KEY	$1.29
2050-12	7991	MOTOR SPROCKET NUT	$1.29
2035-33	35204-33	17T TRANSMISSION SPROCKET	$30.00
2035-33A	25205-33	15T TRANSMISSION SPROCKET	$60.00
2035-41	35204-41	17T TRANSMISSION SPROCKET	$19.99
2279-26	35195-26	TRANSMISSION SPROCKET KEY (2-REQ)	$2.39
2278-26	35216-26	SPROCKET NUT LOCK WASHER	$0.99
364-12	364-12	TRANSMISSION SPROCKET NUT 1929-1940	$6.00
364-37	8010	TRANSMISSION SPROCKET NUT 1941-1952	$7.99
2039-41	37703-41	CLUTCH SPROCKET ASSEMBLY 59T	$144.99
2043-35	41474-35	REAR WHEEL SPROCKET WITH RIVETS	$53.95
2048-30	41485-30	REAR WHEEL SPROCKET DOWEL PINS (6-REQ)	$1.29
8496	8496	REAR WHEEL SPROCKET RIVETS (18-REQ)	$0.59
4034-35	41421-35	REAR WHEEL SPROCKET DUST RING	$7.99

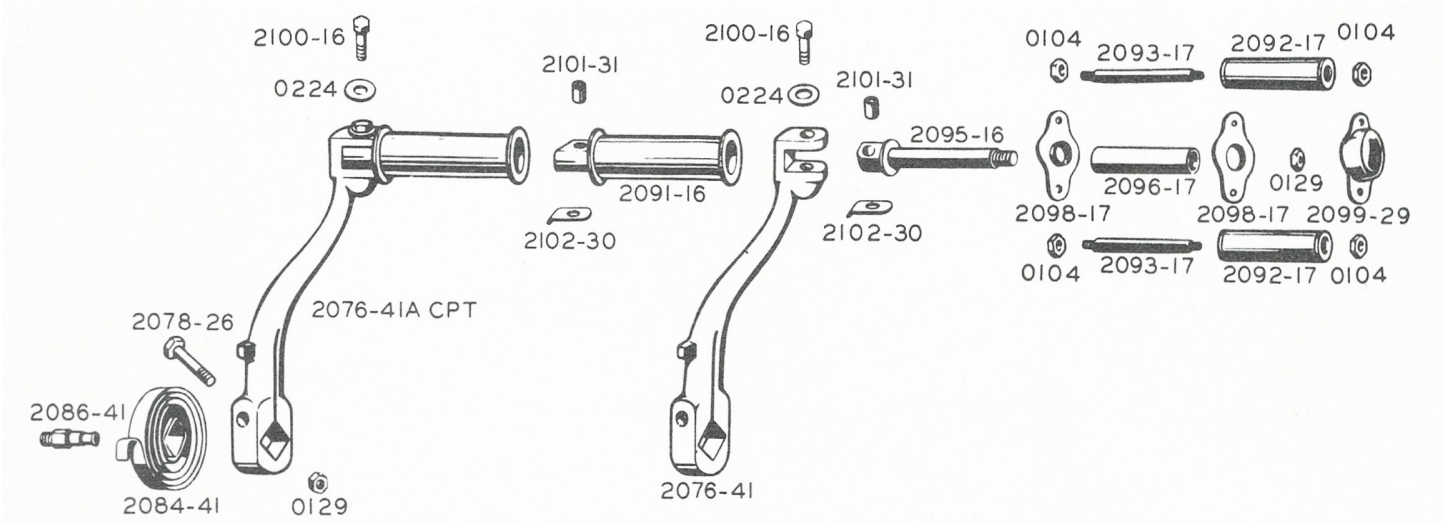

MILITARY KICKER

OLD NUMBER	NEW NUMBER	DESCRIPTION	PRICE
2076-41A	33052-41	STARTER CRANK AND PEDAL ASSEMBLY	$78.00
2076-41	33059-41	STARTER CRANK ONLY	$32.99
2078-26	4370	STARTER CRANK CLAMP BOLT	$1.19
0129	7789	CRANK BOLT NUT	$1.37
2084-41	33084-41	STARTER CRANK SPRING BLACK	$10.99
2084-41CHR	33084-41CHR	STARTER CRANK SPRING BLACK	$11.99
2086-41	33088-41	STARTER CRANK STUD	$8.19
2091-16	33075-16	STARTER PEDAL COMPLETE	$60.00
2092-17	33182-17	PEDAL TUBE	$9.99
2093-17	33180-17	PEDAL TUME ROD	$11.00
0104	7620	ROD NUT	$0.33
2095-16	33192-15	PEDAL PIN	$22.09
2096-17	33201-17	PEDAL PIN COVER PARK	$6.59
0129	7789	STARTER PEDAL PIN NUT	$1.37
0224	6385	PEDAL PIN PLAIN WASHER	$0.49
2098-17	33203-17	PEDAL END PLATE	$7.99
2099-26	33210-29	PEDAL END COVER	$8.99
2100-16	4336	PEDAL PIN BOLT	$5.19
2101-31	33213-31	PEDAL PIN BUSHING	$3.99
2102-30	33215-30	PEDAL PIN SPRING WASHER	$0.99
2165-32	33380-32	STARTER CLUTCH	$74.99
2166-26	33390-26	STARTER CLUTCH SPRING	$1.51
2168-26	33455-26	COUNTERSHAFT SPRING	$7.00
2176-26	33456-26	TRIPPER BOLT	$6.00
2173-41	33458-41	TRIPPER BOLT NUT	$5.00
KIT	9761-4	TRIPPER NUT AND BOLT KIT	$21.99

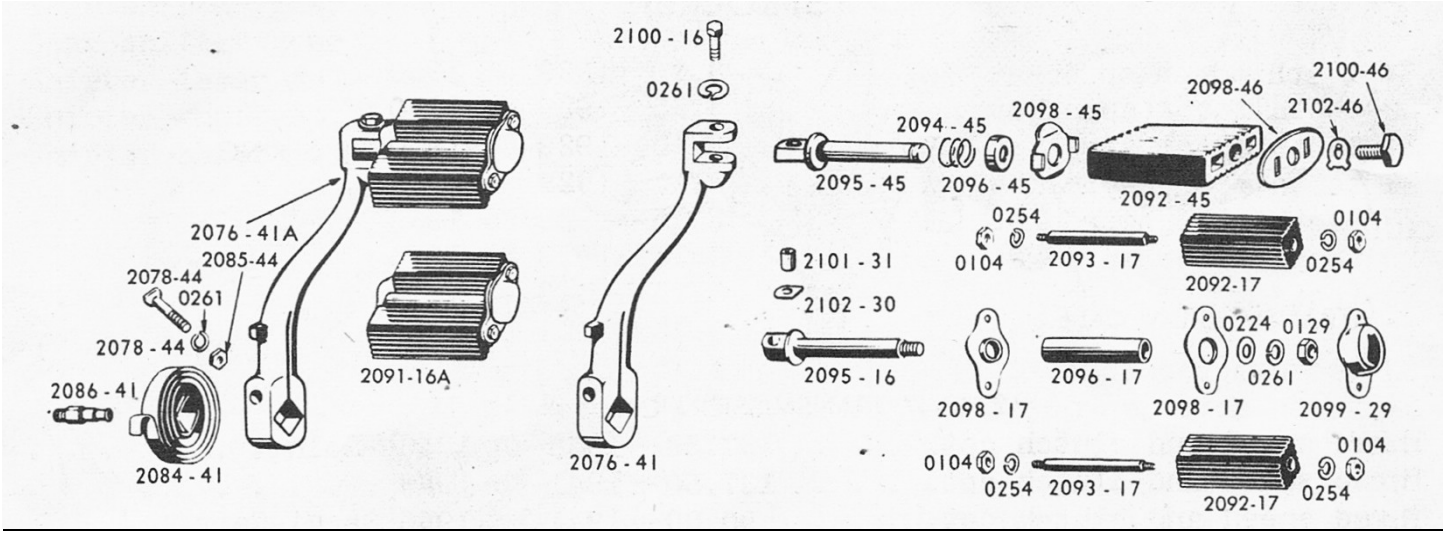

CIVILAN KICKER			
2076-41A	33052-41	STARTER CRANK AND PEDAL ASSEMBLY	$78.00
2076-41	33059-41	STARTER CRANK ONLY	$32.99
2078-44	33078-44	STARTER CRANK BOLT 1942-1950	$11.00
2084-41	33084-41	STARTER CRANK SPRING BLACK	$10.99
2085-44	7800	CRANK BOLT NUT	$0.99
2086-41	33088-41	STARTER CRANK STUD	$8.19
2091-16A	33175-16/CHR	STARTER PEDAL CPT BLACK & CHROME	$25.99
2091-16A	33175-16/CAD	STARTER PEDAL CPT BLACK & CAD	$49.99
2061-16A	33175-16/PARK	STARTER PEDAL CPT BLACK & PARK	$49.99
2061-16A	33175-16/CAD&PARK	STARTER PEDAL CPT BLACK CAD & PARK	$49.99
2091-45	33183-45	STARTER PEDAL BLACK PLASTIC	$58.95
2091-45C	33183-45C	STARTER PEDAL YELLOW PLASTIC	$23.95
2091-45/BECK	33143-45/BECK	STARTER PEDAL BECK ALLOY	$63.95
2092-17	33182-17	PEDAL RUBBER BLACK	$21.95
2092-17A	33182-17R	PEDAL RUBBER RED	$21.95
2092-17B	33182-15W	PEDAL RUBBERS WHITE	$21.95
2093-17	33190-17	PEDAL RUBBER RODS set of 2	$22.00
0104	7620	ROD NUT	$0.33
2095-16	33192-15	PEDAL AXLE	$22.09
2096-17	33201-17/PARK	PEDAL PIN COVER PARK	$6.59
2096-17	33201-17/CAD	PEDAL PIN COVER CAD	$6.59
0129	7789	STARTER PEDAL AXLE NUT	$1.37
0224	6385	PEDAL AXLE WASHER	$0.49
2098-17/P	33203-17/PARK	PEDAL END PLATE PARK	$7.99
2098-17/C	33203-17/CAD	PEDAL END PLATE CAD	$7.99
2099-29/P	33210-29/PARK	PEDAL END COVER PARK	$8.99
2099-29/C	33210-29/CAD	PEDAL END COVER CAD	$8.99
2100-16	4336	PEDAL PIN BOLT	$5.19
2101-31	33213-31	PEDAL PIN BUSHING	$3.99
2102-30	33215-30	PEDAL PIN WASHER	$0.99
2165-32	33380-32	STARTER CLUTCH	$74.99
2166-26	33390-26	STARTER CLUTCH SPRING	$1.51
2168-26	33455-26	COUNTERSHAFT SPRING	$7.00
2172-26	33456-26	TRIPPER BOLT	$6.00
2173-41	33458-41	TRIPPER BOLT NUT	$5.00
KIT	9761-4	TRIPPER NUT AND BOLT KIT	$21.99

ALL THREE SPEED AND THREE SPEED WITH REVERSE TRANSMISSIONS WITH CONTROLS FOR 1935 TO 1950—45" TWINS AND SERVI-CARS

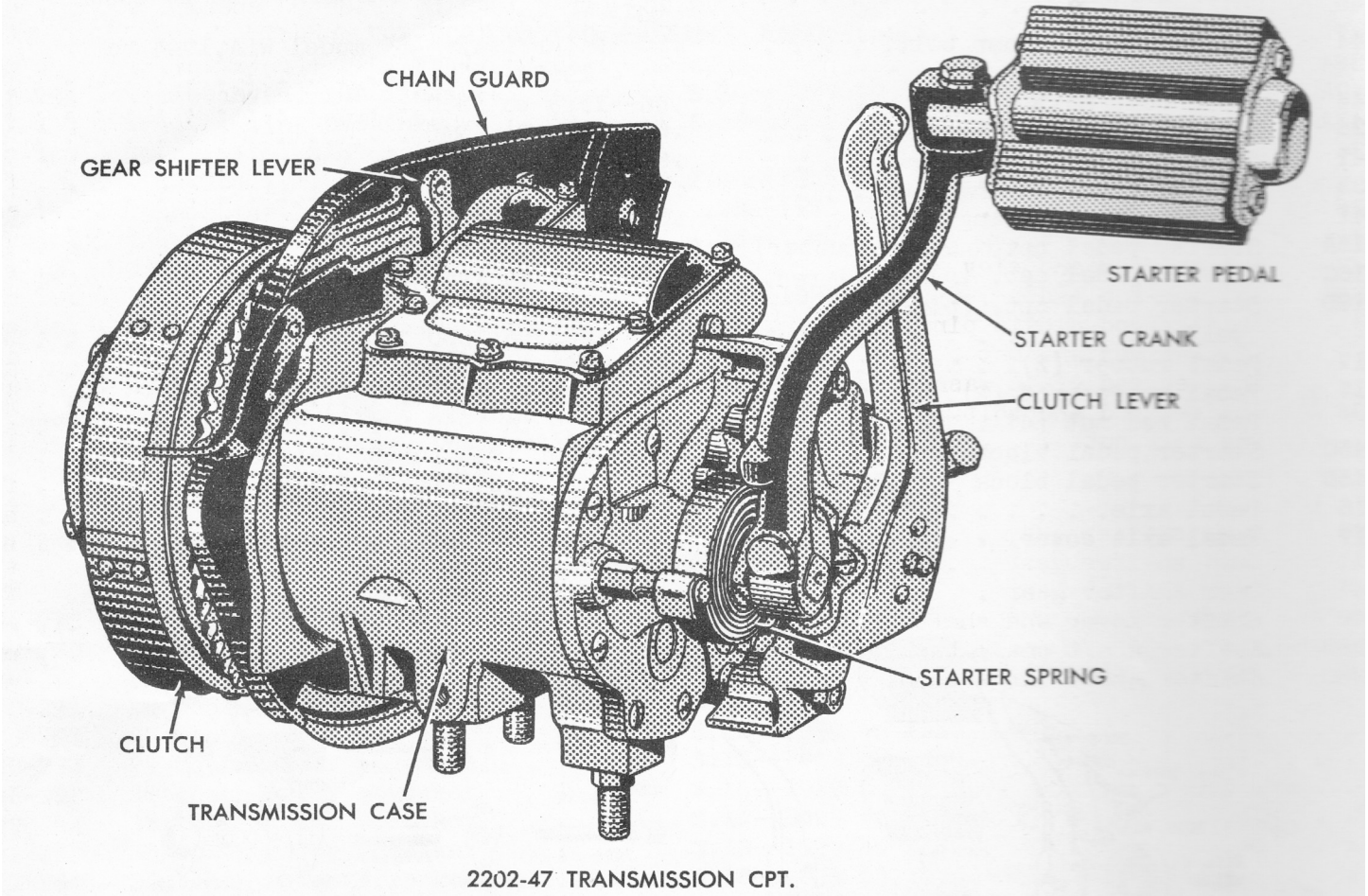

2202-47 TRANSMISSION CPT.

TRANSMISSION			
2202-41E	33006-41	TRANSMISSION ONLY 1941-1946 SOLO 3-SPEED	$1500.00
2202-47	33006-47	TRANSMISSION ONLY 1947-1950 SOLO 3-SPEED	$1500.00
2200-41	33030-41	COMPLETE TRANSMISSION GASKET KIT 1941-1973	$22.95
GEAR SET	GEAR SET	1941-1973 GEAR AND SHAFT KIT	N/A

GEAR SHIFT LEVER			
2204-37	33675-37	SHIFT LEVER CHROME 1937-1946	$66.99
2204-37OD	33675-37/OD	SHIFT LEVER WLA OD GREEN	$64.99
2204-37/47-UP	33675-37/47-UP	SHIFT LEVER CHROME 1947-1973	$66.99
2205-31	33745-31	GEAR SHIFT BALL BLACK	$17.99
2206-37/P	33775-37/P	SHIFTER LEVER STUD PARK 1937-1946	$12.95
2206-37/C	33775-37/C	SHIFTER LEVER STUD CAD 1937-1946	$12.95
2206-37/KIT	2582-3	SHIFTER LEVER STUD AND NUT KIT PARK	$14.99
2206-47	33776-47	SHIFTER LEVER STUD 1947-1973 CAD	$14.99
2207-47	33778-47	SHIFTER LEVER STUD BUSHING	$4.99
2206-47/PKIT	9711-5	SHIFTER LEVER STUD AND BUSHING KIT PARK	$16.99
2206-47/CKIT	7818-5	SHIFTER LEVER STUD AND BUSHING KIT CAD	$16.99
0117	7752	SHIFTER LEVER STUD NUT PARK	$1.09
0259	7040	SHIFTER LEVER STUD NUT LOCK WASHER PARK	$0.20
2208-40	33785-40	SHIFTER GUIDE 1940-1946 3-SPEED CHROME	$31.99
2208-47	33785-47	SHIFTER GUIDE 1947-1952 3-SPEED CHROME	$31.99
2208-40A	33786-40	SHIFTER GUIDE 1940-1946 3-SPEED W/REVERSE CHROME	$31.99
2208-47A	33786-47	SHIFTER GUIDE 1947-1952 3-SPEED W/REVERSE CHROME	$31.99
2210-36/CH	33822-36/C	SHIFTER GUIDE SCREW 1937-46 CHROME	$3.49
2210-36/PK	33822-36/P	SHIFTER GUIDE SCREW 1937-46 PARK	$3.49
054W	3738	SHIFT GUIDE SCREW 1941-1973	$0.49
2212-41A/P	33859-41A/P	SHIFT ROD CLEVIS END PARK	$31.99
2212-41A/C	33859-41A/C	SHIFT ROD CLEVIS END CAD	$31.99
2212-47/P	33875-47/P	SHIFT ROD HOOK END PARK	$16.99
2212-47/C	33875-47/C	SHIFT ROD HOOK END CAD	$16.99

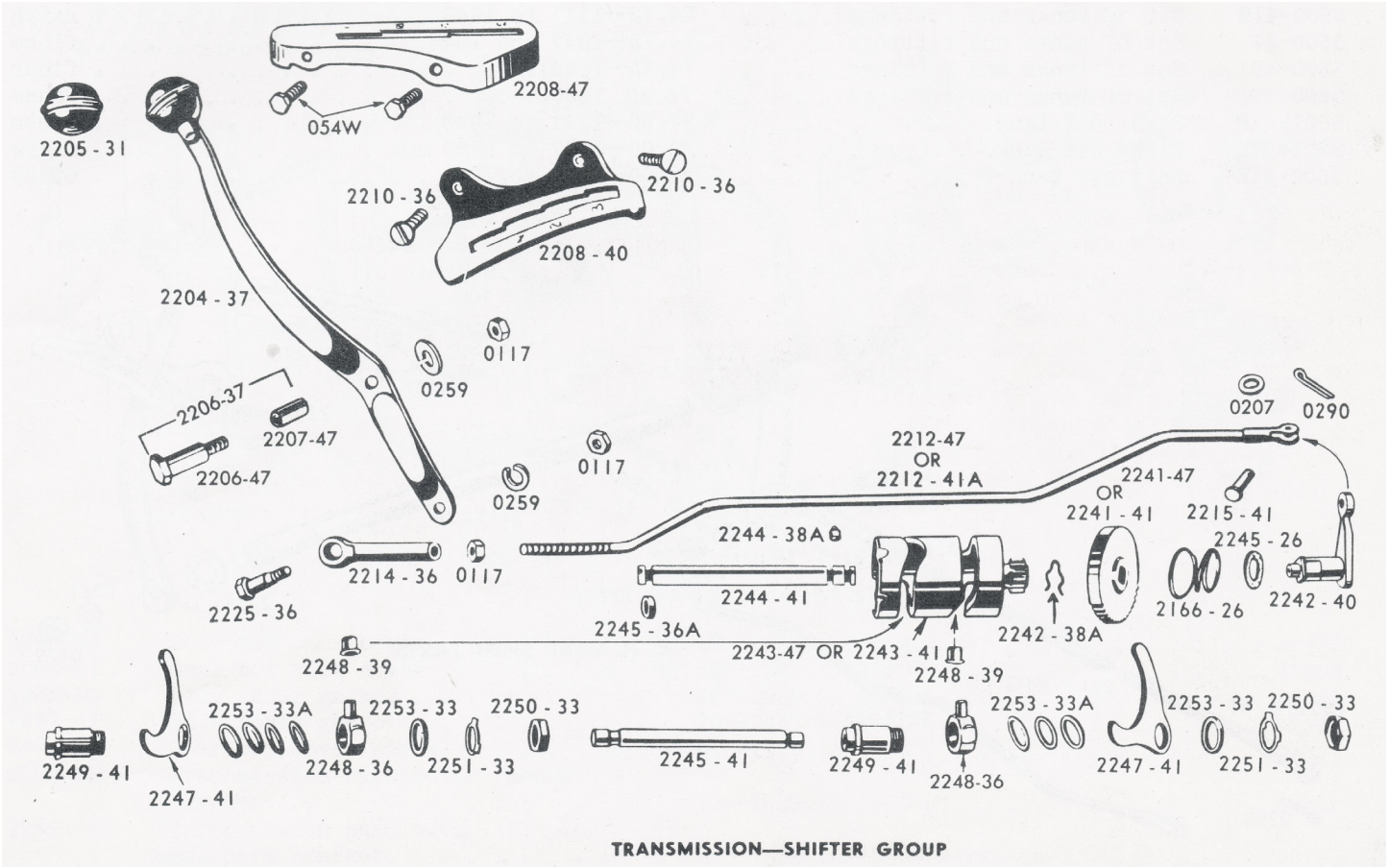

TRANSMISSION—SHIFTER GROUP

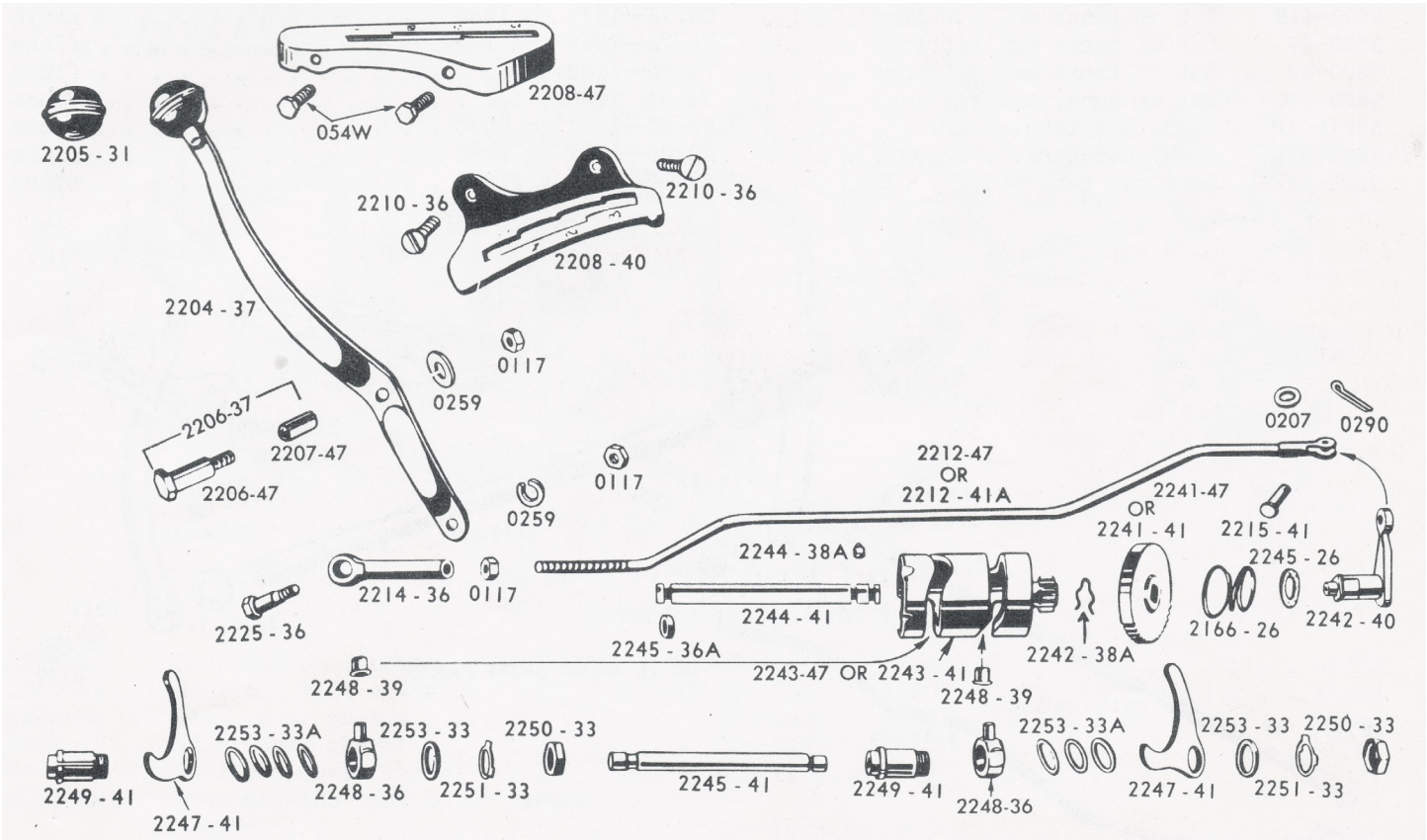

TRANSMISSION—SHIFTER GROUP

2214-36/P	2214-36/P	SHIFT ROD END PARK	$20.99
2214-36/C	2214-36/C	SHIFT ROD END CAD	$20.99
2215-41	33874-41	SHIFT ROD CLEVIS PIN PARK	$3.09
2215-41/KIT	2647-3	SHIFTER ROD CLEVIS PIN KIT Parkerized	$3.99
0117	7752	HEXAGON NUT PARKERIZED 5/16-24 N.F.	$1.09
0207	6220	SHIFT ROD PLAIN WASHER PARK	$0.39
0290	510	COTTER PIN PARKERIZED 1/16 x 1/2"	$0.12
2225-36/P	33879-36/P	SHIFT ROD END BOLT PARK	$8.29
2225-36/C	33879-36/C	SHIFT ROD END BOLT CAD	$8.29
2225-36/PKIT	9706-4	PARKERIZED SHIFTER ROD END BOLT KIT	$8.95
2225-36/CKIT	7819-4	CAD PLATED SHIFTER ROD END BOLT KIT	$8.95
SHIFT SHAFT AND LEVER			
2241-41	33961-41	SHIFTER GEAR 1941-1946	$40.00
2241-47	33961-47	SHIFTER GEAR 1947-1973	$40.00
2242-40	34449-40	SHIFTER LEVER AND SHAFT	$79.95
2242-38B	34427-38	SHIFTER SHAFT SMALL BUSHING	$17.99
2242-38C	34432-38	SHIFTER SHAFT LARGE BUSHING	$15.99
2242-38A	33964-38	SHIFTER GEAR RETAINING SPRING	$9.00
2243-41	34012-41	SHIFTING CAM 1941-1946	$99.95
2243-47	34012-47	SHIFTING CAM 1947-1973	$99.95
2244-38A	34051-38	CAM SHAFT LOCK SCREW	$7.99
2244-41	34031-41	SHIFTER CAM SHAFT	$17.99
2245-36A	34036-36	CAM SHAFT OIL SEAL	$1.29
2245-26	34459-26	GEAR SHIFTER SHAFT LEATHER WASHER	$1.49
2251-36	8872	GEAR SHIFTER CAM PLUNGER BALL	$0.49

2251-36A	34057-36	CAM PLUNGER BALL SPRING	$2.99
2251-36B	34053-36	CAM PLUNGER CAP SCREW	$14.99
2245-41	34140-41	SHIFTING FORK SHAFT	$24.99
2247-41	34161-41	GEAR SHIFT FORKS 1941-1973 (2-REQ)	$18.99
2248-36	34165-36	SHIFT FINGER 1940-1973 (2-REQ)	$21.95
2248-39	34168-39	SHIFT FINGER ROLLER (2-REQ)	$5.49
2249-41	34176-41	SHIFTER FORK BUSHING (2-REQ)	$23.99
2250-33	34179-33	BUSHING NUT (2-REQ)	$1.99
2251-33	34180-33	BUSHING LOCK WASHER (2-REQ)	$1.59
2253-33A	6752	SHIFTER FORK SHIM .014	$0.99
2253-33B	6750	SHIFTER FORK SHIM .007	$0.99

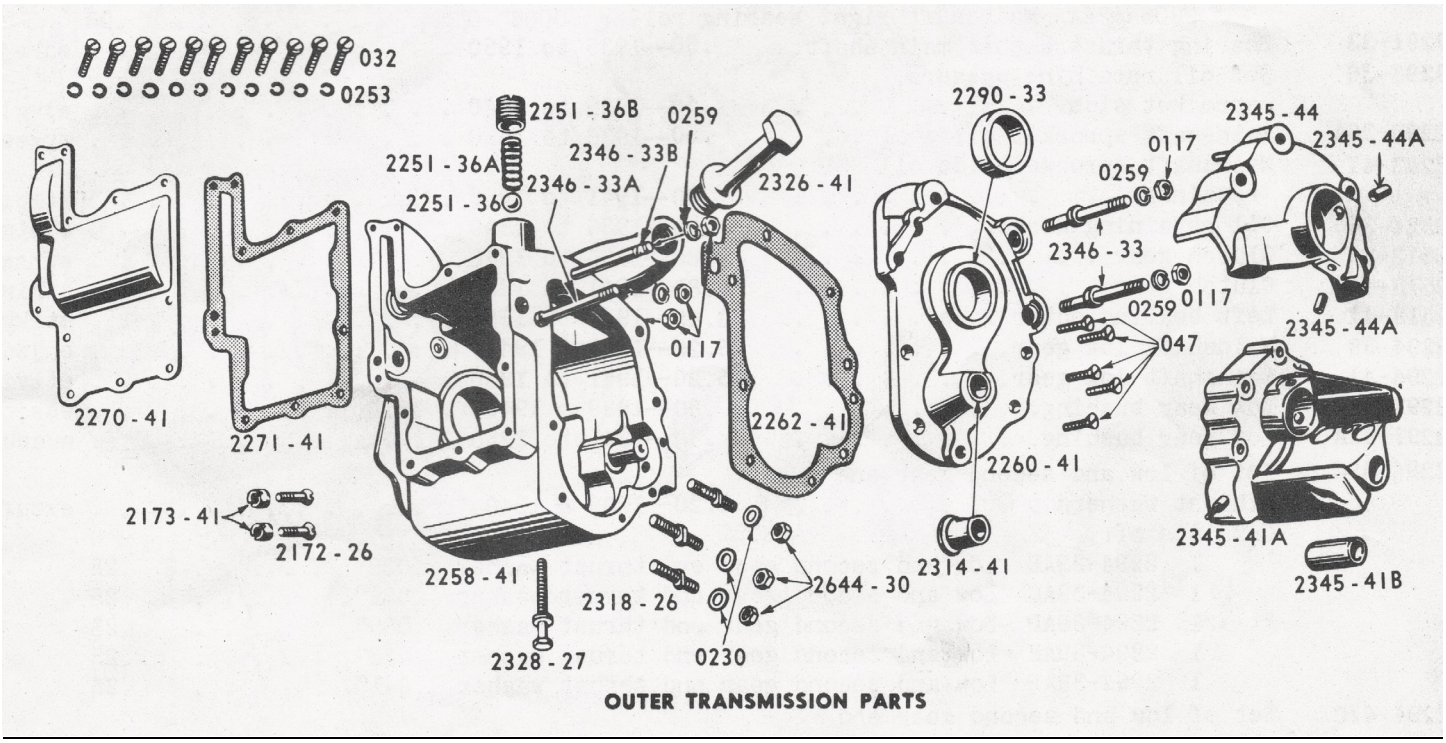

OUTER TRANSMISSION PARTS

GEAR BOX			
2258-41	34702-41	GEAR BOX ONLY	$275.00
2260-41	34821-41	GEAR BOX SIDE COVER	$175.00
047	2723	GEAR BOX SIDE COVER SCREW	$1.29
047/KITPK	9687-5	GEAR BOX SIDE COVER SCREW KIT PARK	$6.29
047/KITCD	9301-5	GEAR BOX SIDE COVER SCREW KIT CAD	$6.29
2262-39	34831-39	CASE COVER RUBBER SEAL	$1.49
2262-41	34826-41	SIDE COVER GASKET	$1.29
2270-41	34816-41	GEAR BOX TOP COVER	$30.00
2271-41	34825-41	TOP COVER GASKET	$1.29
032	1206	TOP COVER SCREW PARK	$0.50
0253	7025	TOP COVER LOCK NUT PARK	$0.25
2326-41	703	TRANSMISSION OIL FILLER PLUG	$15.95
2172-26	33456-26	TRIPPER BOLT	$6.00
2173-41	33458-41	TRIPPER BOLT NUT	$5.00
KIT	9761-4	TRIPPER NUT AND BOLT KIT	$21.99
2328-27	34736-27	GEAR BOX ADJUSTING SCREW	$12.95
2318-26	34725-26	GEAR BOX BOTTOM STUD	$7.99
2318-26/KIT	9919-3	GEAR BOX BOTTOM STUD KIT	$21.95

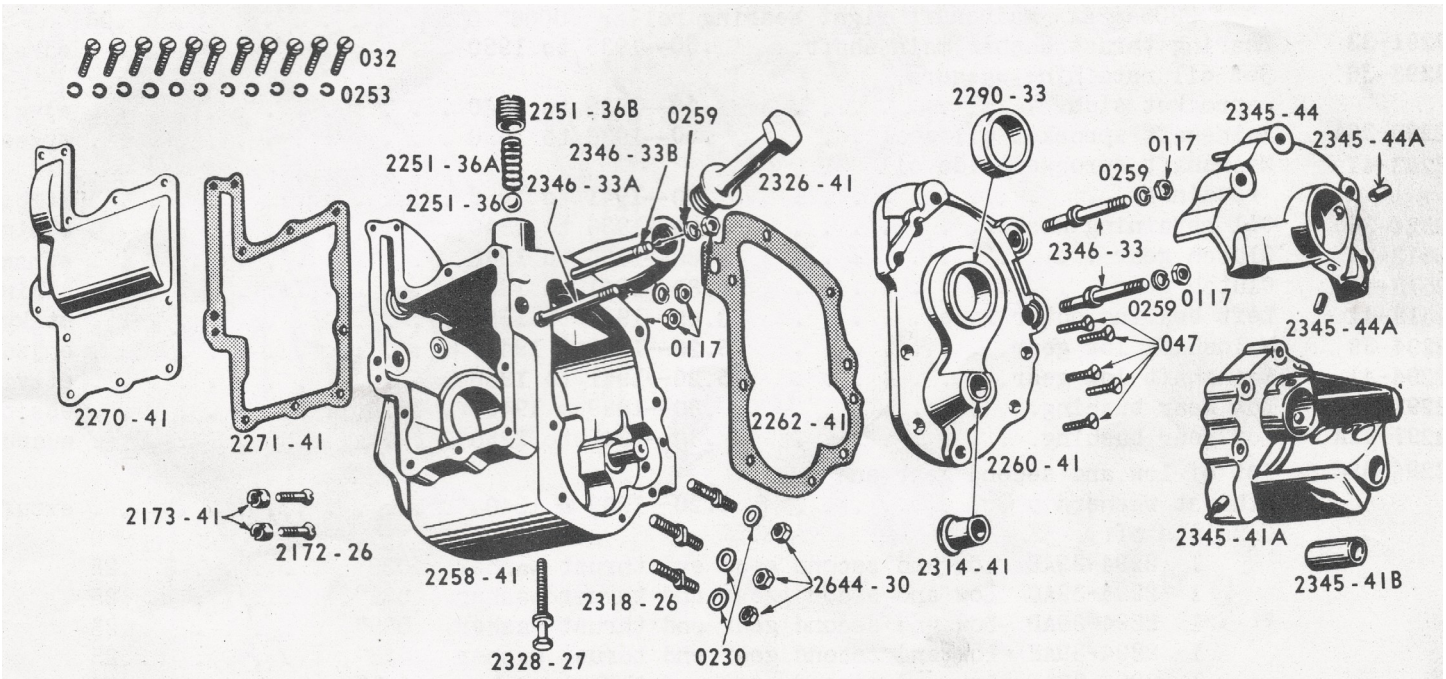

OUTER TRANSMISSION PARTS

GEAR BOX			
0230	6490	STUD WASHER	$0.96
2644-30	7863	STUD NUT	$2.19
2346-33	34892-33	SPROCKET COVER SHOULDER STUD	$11.00
2346-33B	34890-33	SPROCKET COVER STUD	$11.00
2346-33&33B/PK	9686-16	STUD KIT	$27.99
2346-33&33B/PCD	8622-16	STUD KIT	$27.99
0117	7752	SHIFTER LEVER STUD NUT PARK	$1.09
0259	7040	SHIFTER LEVER STUD NUT LOCK WASHER PARK	$0.20
2290-33	35102-33	OUTER BEARING RACE	$54.95
2314-41	36042-41	COUNTER SHAFT BUSHING	$23.99
2345-41/44A	34873-44	SPROCKET COVER	$75.00
2345-44A	24885-44	SPROCKET COVER BUSHINGS set of 2	$12.00
MAINSHAFT			
2272-41	35043-41	MAINSHAFT	$151.00
2516-41A	25380-41	SET OF MAINSHAFT SPACERS .075-.115 FITS 45"	$45.49
2290-33	35102-33	OUTER BEARING RACE	$54.99
2306-32	9090	MAINSHAFT BEARING ROLLER STANDARD (.52 X 5/8")	$0.29
2306-32F	9091	MAINSHAFT BEARING ROLLER .0004 OVERSIZE	$0.29
2306-32KA	9092	MAINSHAFT BEARING ROLLER .0008 OVERSIZE	$0.29
2291-33	35110-33	BEARING THRUST WASHER MAINSHAFT	$3.99
2293-36A	35221-36	MAINSHAFT SPROCKET OIL SEAL	$9.99
2513-41	37450-41	CLUTCH GEAR	$130.50
2518-41	37474-41	LEFT BEARING OUTER RACE	$65.99
2294-41	35275-41	MAINSHAFT LOW GEAR	$87.00
2297-41A	35316-41	LOW GEAR BUSHING	$13.99
2294-41C	35344-41	SET OF LOW AND 2ND GEAR THRUST WASHERS .041/.075	$38.95
2294-41B	35341-41	LOW GEAR END THRUST WASHER	$3.99
2295-41	35294-41	SECOND GEAR	$87.00
2297-41	35320-41	SECOND GEAR BUSHING	$13.99

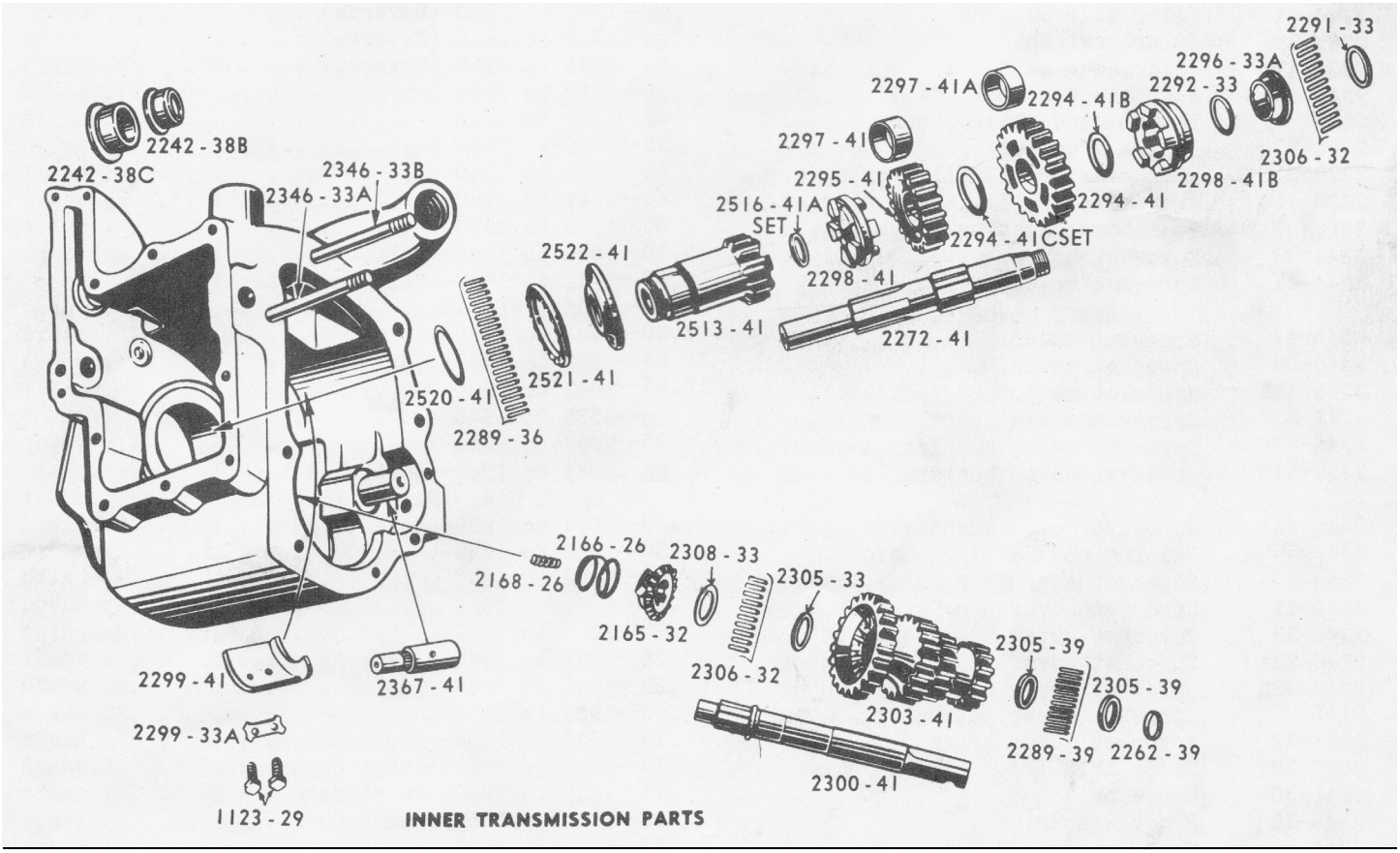

MAINSHAFT			
2296-41	35284-41	REVERSE GEAR	$90.00
2297-33	35326-33	REVERSE GEAR BUSHING	$14.99
2292-33	35340-33	REVERSE GEAR THRUST WASHER	$3.99
2296-33A	35332-33	SPACER COLLAR (USED IN PLACE OF REVERSE GEAR)	$17.99
2298-41A	35442-41	SHIFT CLUTCH LOW AND REVERSE	$80.00
2298-41B	35441-41	SHIFT CLUTCH LOW GEAR	$80.00
2298-41	35445-41	SHIFT CLUTCH SECOND AND HIGH GEAR	$80.00
2299-41	35333-41	SECOND GEAR RETAINING BRACKET	$19.99
1123-29	3754	RETAINING BRACKET BOLT	$3.99
2299-33A	35335-33	BRACKET BOLT LOCK WASHER	$3.99
COUNTER SHAFT			
2300-41	35613-41	COUNTER SHAFT	$89.00
2303-41	35709-41	COUNTER SHAFT CLUSTER GEAR	$232.00
2305-33	35911-33	INNER BEARING THRUST WASHER RIGHT END	$3.99
2308-33	35910-33	OUTER BEARING THRUST WASHER	$3.99
2306-32	9090	COUNTER SHAFT BEARING ROLLER LEFT END (19-REQ) (.152 X 5/8")	$0.29
2306-32F	9091	COUNTER SHAFT BEARING ROLLER .0004 OVERSIZE	$0.29
2306-32KA	9092	COUNTER SHAFT BEARING ROLLER .0008 OVERSIZE	$0.29
2312-26	36035-26	COUNTER SHAFT BUSHING LEFT	$22.99
2365-41	36141-41	IDLER GEAR	$84.99
2366-41	36152-41	IDLER GEAR BUSHING	$10.99
2367-41	36159-41	IDLER GEAR SHAFT	N/A
2346-41	34898-41	SPROCKET COVER PIN	$5.99
2165-32	33380-32	STARTER CLUTCH	$74.99
2166-26	33390-26	STARTER CLUTCH SPRING	$1.51

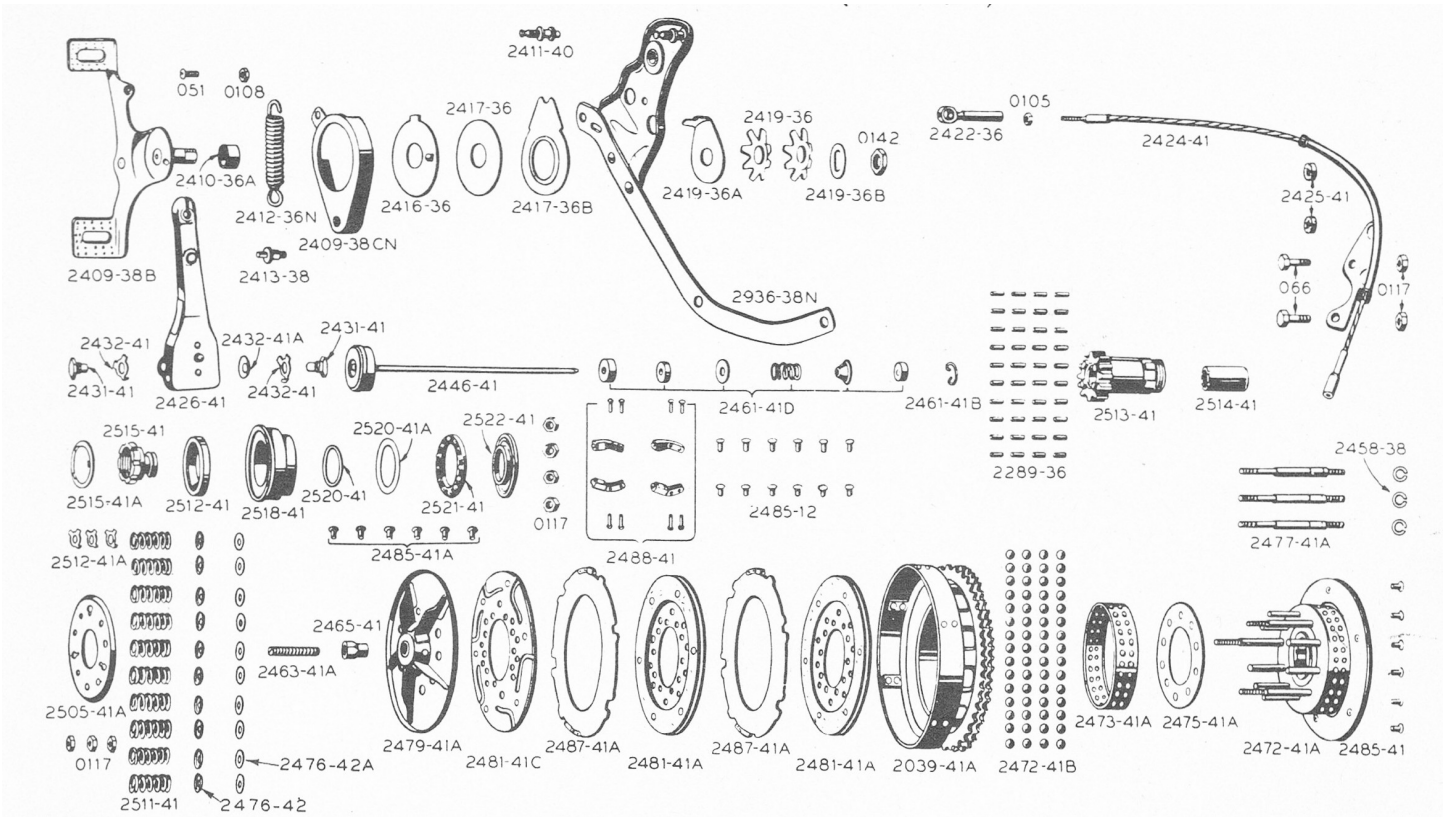

CLUTCH GROUP			
2402-41	36752-41	COMPLETE CLUTCH	N/A
2409-38B	36812-38	FOOT CLUTCH LEVER PARK	$74.99
2409-38C/BK	36830-36/B	FOOT CLUTCH LEVER BEARING COVER BLACK	$25.99
2409-38C/CH	36830-36/C	FOOT CLUTCH LEVER BEARING COVER CHROME	$25.99
2409-38CN	36830-36/OD	FOOT CLUTCH LEVER BEARING COVER OD GREEN	$25.99
051	2762	COVER FASTENING BOLT	$1.40
0108	7691	COVER FASTENING BOLT WASHER	$0.99
2410-36A	36857-36	FOOT LEVER BRACKET BUSHIHG	$13.00
2411-40	36871-40	CLUTCH LEVER SPRING STUD	$11.29
2412-36N	36880-36	FOOT CLUTCH LEVER SPRING	$19.99
2413-38	36888-38	CLUTCH ROD STUD	$11.95
2416-36	36901-36	FRICTION DISC STUD	$19.99
2417-36	36897-36	FRICTION DISC FIBER	$4.99
2417-36B	36895-36	BRACKET FRICTION DISC	$19.99
2419-36	36906-36	SPRING FRICTION WASHER	$5.04
2419-36A	36908-36	FLAT FRICTION WASHER	$15.99
2419-36B	36909-36	FRICTION STUD LOCK WASHER	$5.04
0142	7984	FRICTION STUD NUT	$2.59
2422-36/PK	36819-36/PK	CLUTCH LEVER CABLE END PARK	$18.69
2422-36/CD	36819-36/CD	CLUTCH LEVER CABLE END CAD	$18.69
2424-41	36975-41	CLUTCH CABLE ASSEMBLY 2-HOLE	$55.95
066	4000	CABLE BRACKET BOLT	$2.10
0117	7752	5/16”-24 PARKERIZED NUT	$1.09
2426-41	36983-41	CLUTCH RELEASE LEVER	$65.00
2431-44	37077-44	CLUTCH RELEASE LEVER SCREW	$15.99
2432-44	37081-44	RELEASE LEVER SCREW LOCK WASHER	$2.95
2432-41A	37080-41	RELEACE LEVER SPRING WASHER	$5.00

2446-41	37287-41	CLUTCH PUSH ROD AND BEARING COMPLETE	$32.95
2461-41B	37354-41	PUSH ROD GUIDE SPRING RING	$6.00
2461-41D	37335-41	SET OF PUSHROD OIL SEALS	$23.95
2463-41A	37357-41	PUSH ROD ADJUSTING SCREW	$2.99
2465-41	37361-41	PUSH ROD ADJUSTING SCREW NUT	$3.99
2279-26	35195-26	CLUTCH KEY	$2.83
2512-41	37465-41	CLUTCH GEAD OIL SEAL	$10.00
2513-41	37450-41	CLUTCH GEAR	$150.50
2514-41	37458-41	CLUTCH GEAR BUSHING	$19.99
2515-41	37460-41	CLUTCH GEAR NUT	$25.09
2515-41A	37462-41	CLUTCH NUT LOCK WASHER	$4.00
2518-41	37474-41	LEFT BEARING OUTER RACE	$65.95
2289-36	9084	STANDARD (.125 X .615) (40-REQ)	$0.29
2289-36F	9085	ROLLER .0004 OVERSIZE	$0.29
2289-36KA	9086	ROLLER .0008 OVERSIZE	$0.29
9087	9087	ROLLER .001 OVERSIZE	$0.31
2306-32	9090	ROLLER, 45 TRANSMISSION STANDARD	$0.45
2306-32F	9091	ROLLER, 45 TRANSMISSION +.0004	$0.45
2306-32KA	9092	ROLLER, 45 TRANSMISSION +.0008	$0.45
2520-41	37480-41	LEFT BEARING THRUST WASHER	$4.79
2520-41A	37482-41	LEFT BEARING RETAINER WASHER	$5.20
2521-41	37467-41	THRUST BEARING AND BALLS	$7.99
2522-41	37477-41	THRUST BEARING RACE	$41.99
2039-41	37703-41	CLUTCH SPROCKET	$144.99
2472-41A	37551-41	CLUTCH HUB ASSEMBLY	$132.95
2472-41B	8856	CLUTCH HUB BEARINGS (60-REQ)	$0.10
2473-41A	37568-41	CLUTCH HUB BALL BEARING RETAINER	$49.83
2475-41A	37577-41	CLUTCH HUB BEARING PLATE	$17.95
2479-41	37871-41	CLUTCH RELEASE DISC	$32.95
FRICTION SET	37931-41	CLUTCH FRICTION PLATE KIT, BARNETT FITS 1941-1973	$66.99
2487-41	37975-41	CLUTCH STEEL DISC (2-REQ)	$15.50
2505-41	38010-41	CLUTCH PRESSURE PLATE	$7.95
2511-41	38077-41	SET OF 10 CLUTCH SPRINGS	$20.00
0117A	37581-47	STUD NUT REPLACE 0117 ON PRESSURE PLATE	$2.09

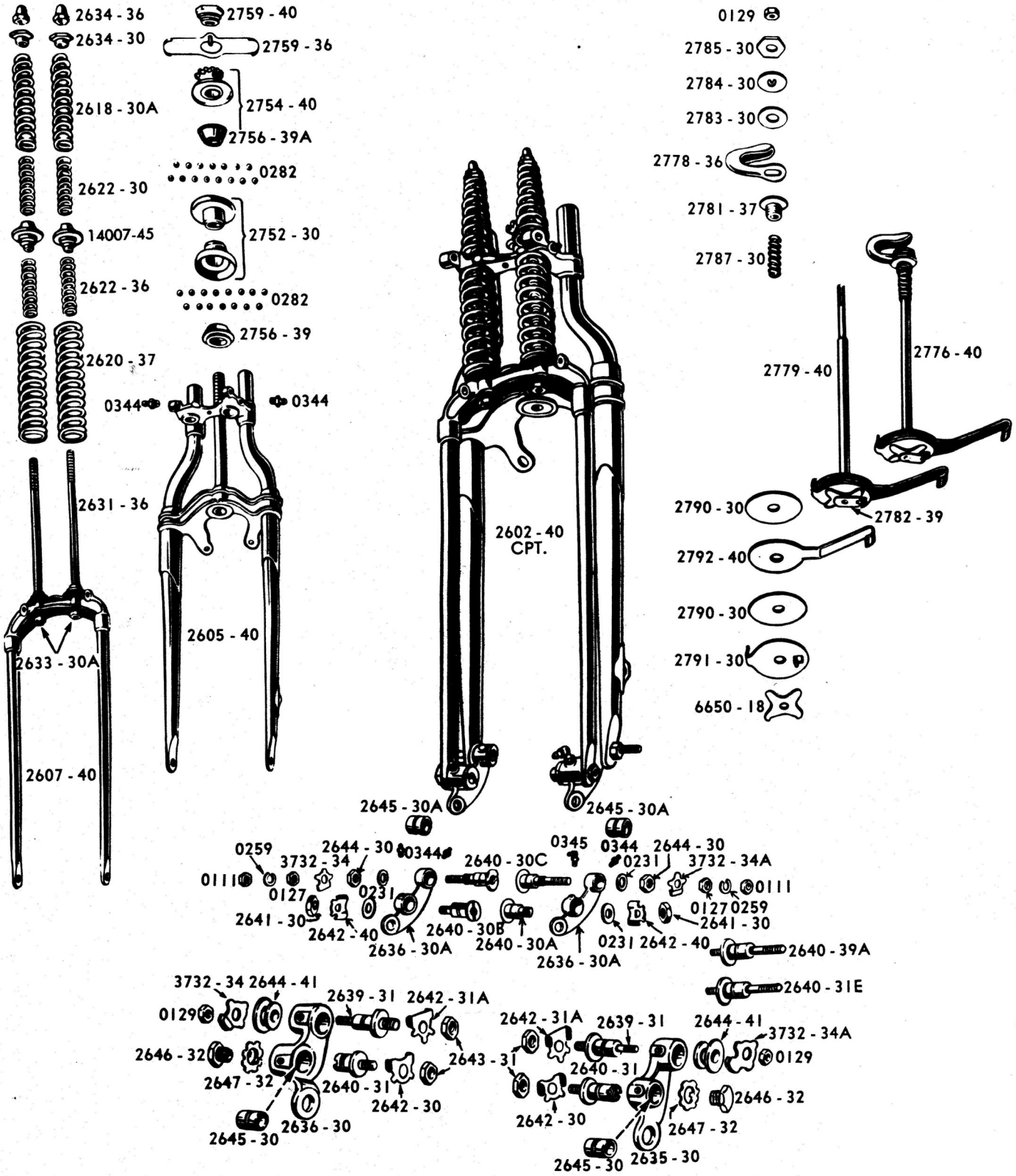

2602-40	45517-40	SET OF FORKS COMPLETE 1940-1952 WL,WLA	$1300.00
2602-41	45518-41	SET OF FORKS COMPLETE 1940-1954 SERVI AND 42-43 WLC	$1300.00
2605-40	65526-40	RIGID FORK REAR 1940-1952 WL,WLA	$875.00
2605-41	45527-41	RIGID FORK REAR 1940-1954 SERVI AND 42-43 WLC	$875.00
REPAIR	FORK STEM	REPLACEMENT FORK STEM	$145.00

FRONT FORK			
2607-40	45610-40	SPRING FORK RAW 1940-1952 WL,WLA	$350.00
2606-36	45609-36	SPRING FORK RAW 1941-1954 SERVI 42-43 WLC 36-E46 BT	$350.00
2607-40/REPAIR		SPRING FORK LOWER REPAIR LEGS RAW 1940-1952 WL, WLA	$159.00
2606-36/REPAIR		SPRING FORK LOWER REPAIR LEGS RAW 41-54 G, 42-43 WLC 36-46 BT	$159.00
2617-36	46053-36	COMPLETE SET OF FORK SPRINGS INNER & OUTER 4PCS	$100.00
2631-36	45641-36	SPRING ROD	$20.00
2631-26/KIT	7707-4	SPRING ROD KIT 2 RODS AND NUTS	$38.95
2632-31/KIT	7706-2	SPRING ROD BUSHING KIT 2PCS 1931-1945 ALL	$39.95
14007-45/KIT	2143-2	SPRING ROD BUSHING KIT 2PCS 1946-1954 ALL	$39.95
2633-30A	45654-30	SPRING ROD NUT LOWER END (2 REQ)	$5.00
2634-30/KIT/PK	45647-30/PK	SPRING ROD NUT UPPER END (2) PARK	$16.40
2634-30/KIT/CD	45647-30/CD	SPRING ROD NUT UPPER END (2) CAD	$16.40
2634-36/KIT/PK	45648-36/PK	SPRING ROD LOCK NUT KIT (2) PARK	$15.00
2634-36/KIT/CD	45648-36/CD	SPRING ROD LOCK NUT KIT (2) CAD	$15.00
2635-30/2636-30	45671-36/KIT	ROCKER PLATE KIT L&R ASSEMPLY 41-54 G 42-43 WLC 36-49 BT	$417.99
2636-30A/KIT	45661-30	ROCKER PLATE KIT (2)	$117.95
2638-36	7606-26	ROCKER PLATE STUD AND BUSHING REPAIR KIT COMPLETE WLC BT	$186.00
2639-31	45673-31	FRONT ROCKER PLATE STUD 41-54 G 42-43 WLC 36-49 BIG TWIN	$32.00
2640-31	45672-31	REAR ROCKER PLATE STUD 41-54 G 42-43 WLC 36-49 BIG TWIN	$32.00
2642-30	45680-30	FRONT ROCKER PLATE STUD NUT LOCK 41-54 G 42-43 WLC 36-49 BT	$2.70
2642-31A	45681-31	REAR ROCKER PLATE STUD NUT LOCK 41-54 G 42-43 WLC 36-49 BT	$2.70
2632-31	45643-31	ROCKER PLATE STUD NUT INSIDE 41-54 G 42-43 WLC 36-49 BT	$6.00
2645-30	45667-30	ROCKER PLATE STUDE BUSHING 41-54 G 42-43 WLC 36-49 BT	$14.50
0129	7789	ROCKER PLATE STUD NUT 41-54 G 42-43 WLC 36-49 BT	$1.37
2640-31E	45678-31	REAR ROCKER PLATE STUD FRONT STAND 42-43 WLC 39-49 BT	N/A
2638-36A	9216-22	ROCKER PLATE STUD AND BUSHING REPAIR KIT COMPLETE WLWLA	$175.00
2640-30A	45674-30	LEFT FRONT ROCKER PLATE STUD 1930-1952 WL, WLA	$30.00
2640-30B	45675-30	RIGHT FRONT ROCKER PLATE STUD	$27.00
2640-30C	45676-30	REAR ROCKER PLATE STUD (2-REQ) 1930-1952 WL, WLA	$31.50
2641-30	7859	REAR ROCKER PLATE STUD NUT LARGE (2-REQ) 1930-1952 WL, WLA	$1.80
2642-30	45680-30	FRONT ROCKER PLATE STUD NUT LOCK (2-REQ) 1930-1952 WL, WLA	$2.70
2642-40	45681-40	FRONT ROCKER PLATE STUD NUT LOCK (2-REQ) 1930-1952 WL, WLA	$3.20
2644-30	7893	REAR STUD SPACER NUT (2-REQ) 1930-1952 WL, WLA	$2.15
2645-30A	45668-30	ROCKER PLATE STUD BUSHING (4-REQ) 1930-1952 WL, WLA	$14.35
0127	7793	REAR ROCKER PLATE STUD NUT (2-REQ) 1930-1952 WL, WLA	$1.37
0231	6520	FRONT ROCKER PLATE STUD WASHER (4-REQ) 1930-1952 WL, WLA	$1.10
2640-30D	45677-30	FRONT STAND STUD (2-REQ) 1930-1952 WL, WLA	N/A
0128	7809	ROCKER PLATE FRONT STAND NUT (2-REQ) 1930-1952 WL, WLA	$2.00
0344/PK	9851/PARK	GREASE FITTING STRAIGHT PARK	$2.50
0344/CD	9851/CAD	GREASE FITTING STRAIGHT CAD	$2.50
0345/PK	9852/PK	GREASE FITTING 67-1/2DEG PARK	$2.95
0345/CD	9852/CD	GREASE FITTING 67-1/2DEG CAD	$2.95
2644-41	45684-41	ROCKER PLATE REAR STUD SPACER 1942-43 WLC 1936-49 BT	$8.00
2646-32	45682-32	ROCKER STUD SCREW (2-REQ) 41-54 G 42-43 WLC 36-49 BT	$5.50
2647-32	45683-32	ROCKER STUD SCREW LOCK (2-REQ) 41-54 G 42-43 WLC 36-49 BT	$2.70

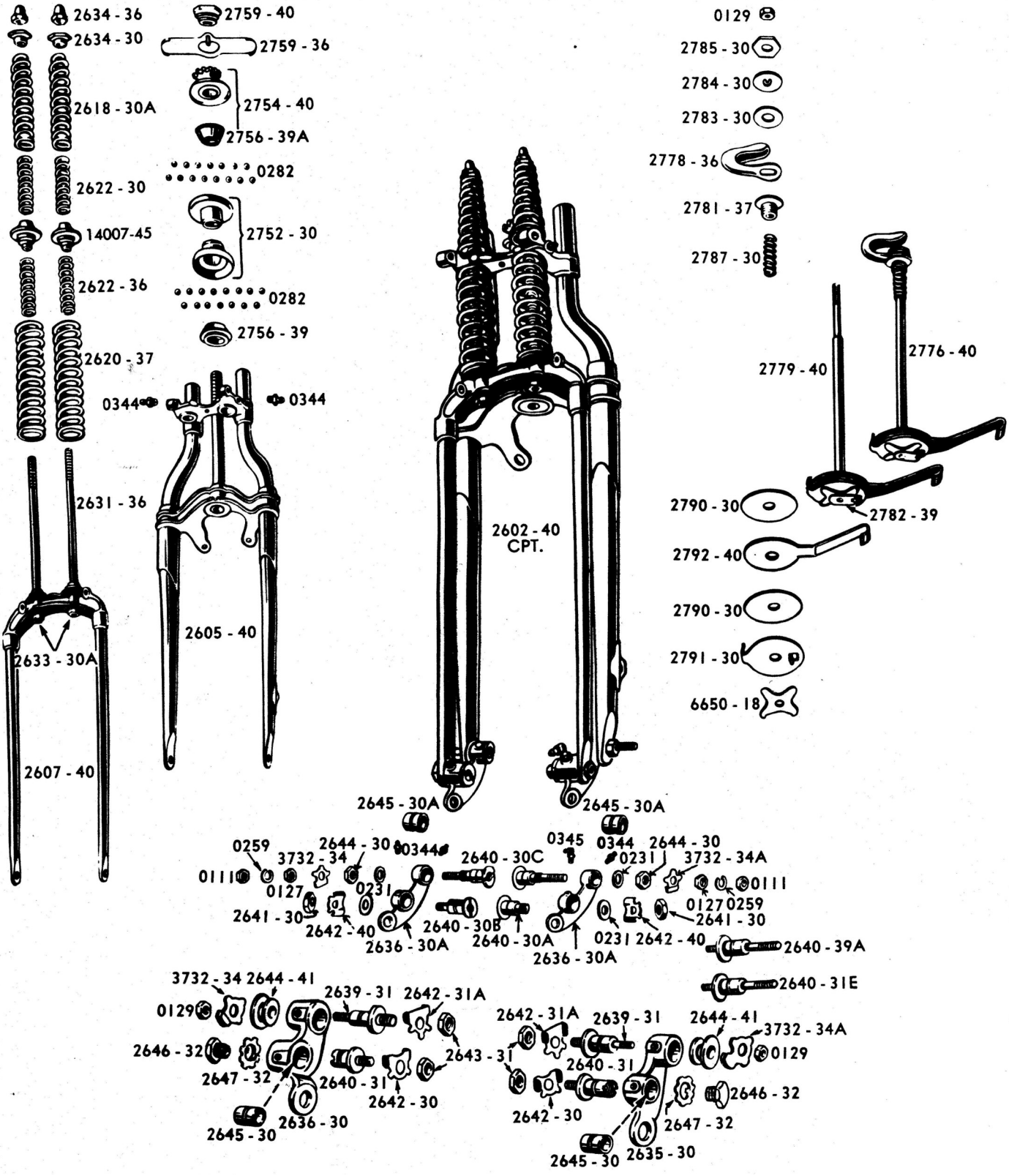
2634 - 36
2634 - 30
2618 - 30A
2622 - 30
14007-45
2622 - 36
2620 - 37
2631 - 36
2633 - 30A
2607 - 40
2759 - 40
2759 - 36
2754 - 40
2756 - 39A
0282
2752 - 30
0282
2756 - 39
0344
0344
2605 - 40
2602 - 40 CPT.
0129
2785 - 30
2784 - 30
2783 - 30
2778 - 36
2781 - 37
2787 - 30
2779 - 40
2776 - 40
2790 - 30
2782 - 39
2792 - 40
2790 - 30
2791 - 30
6650 - 18
2645 - 30A
2645 - 30A
0259
2644 - 30
0344
0345
0344
2644 - 30
3732 - 34
2640 - 30C
0231
3732 - 34A
0111
0127
0231
0111
0127 0259
2641 - 30
2641 - 30
2642 - 40
2640 - 30B
2636 - 30A
2640 - 30A
2636 - 30A
0231 2642 - 40
2640 - 39A
2640 - 31E
3732 - 34 2644 - 41
2639 - 31 2642 - 31A
0129
2646 - 32
2647 - 32
2643 - 31
2640 - 31
2642 - 30
2645 - 30
2636 - 30
2642 - 31A
2639 - 31
2644 - 41
3732 - 34A
0129
2640 - 31
2646 - 32
2642 - 30
2647 - 32
2645 - 30
2635 - 30

HEAD FITTINGS			
2750-40/PK	48310-40/PK/KIT	SET OF NECK CUPS PARK UPPER & LOWER AND BEARINGS	$115.00
2750-40/CD	48310-40/CD/KIT	SET OF NECK CUPS CAD UPPER & LOWER AND BEARINGS	$115.00
2750-40/KIT	48310-40/INST/KIT	COMPLETE FORK CUP INSTALLITION KIT CAD CUPS & PARK	$150.00
0282	8860	BALL BEARING FITS FORK STEMS AND 45 FRONT HUBS	$0.29
2752-30/PK	48310-30/PK	SET OF NECK CUPS PARK	$62.00
2752-30/CD	48310-30/CD	SET OF NECK CUPS CAD	$62.00
2754-40	48335-39	HEAD CONE	$28.00
2756-39/A	48346-39	HEAD CONE RACE	$32.00
2753-40	48363-40	LOWER CENTERING RING FITS 45 TWINS ALL	$14.00
2759-36/OD	46550-36/OD	UPPER HEAD CONE LOCK PLATE OD GREEN	$40.00
2759-36	46550-36	UPPER HEAD CONE LOCK PLATE POLISHED STAINLESS	$40.00
2739-40/PK	9713-1	HANDLEBAR AND CONE CLAMP NUT PARK	$12.00
2739-40/CP	8487-1	HANDLEBAR AND CONE CLAMP NUT CAD	$12.00
2739-40/CR	8486-1	HANDLEBAR AND CONE CLAMP NUT CHROME	$14.00

STEERING DAMPER			
2776-40N	46701-40N	DAMPER ASSEMBLY PARK WLA	$126.00
2776-40	46701-40	DAMPER ASSEMBLY CAD AND CHROME WL	$126.00
27786-36/ASSM/PK	2585-7	COMPLETE UPPER DAMPER ASSEMBLY PARK	$50.00
27786-36/ASSM/CHR	2585-7/CD	COMPLETE UPPER DAMPER ASSEMBLY CHROME AND CAD	$50.00
2778-36/PK	46755-36/PK	DAMPER LEVER PARK	$32.50
2778-36/CH	46755-36/CH	DAMPER LEVER CHROME	$32.50
2779-40	46765-40	DAMPER ROD AND PLATE 2782-39	$32.00
2781-37/PK	46758-37/PK	DAMPER SCREW PARK	$20.00
2781-37/CD	46758-37/CD	DAMPER SCREW CAD	$20.00
2783-30	46779-30	DAMPER BAKELITE WASHER	$10.00
2784-30/PK	46775-30/PK	DAMPER ADJUSTING WASHER PARK	$5.20
2784-30/CD	46775-30/CD	DAMPER ADJUSTING WASHER CAD	$5.20
2785-30/PK	46746-30/PK	DAMPER ADJUSTING NUT PARK	$6.50
2785-30/CD	46746-30/CD	DAMPER ADJUSTING NUT CAD	$6.50
0129	7789	DAMPER ROD LOCK NUT	$1.37
2787-30	46777-30	DAMPER RELEASE SPRING	$6.50
2790-30	46727-30	FIBER FRICTION WASHER (2-REQ)	$7.00
2791-30	46717-30	DAMPER STEEL DISC	$24.00
2792-40/PK	46758-40/PK	FRAME HEAD BRACKET PARK	$30.00
2792-40/CD	46758-40/CD	FRAME HEAD BRACKET CAD	$30.00
6650-18	88936-18	SPIDER WASHER PARK	$9.00

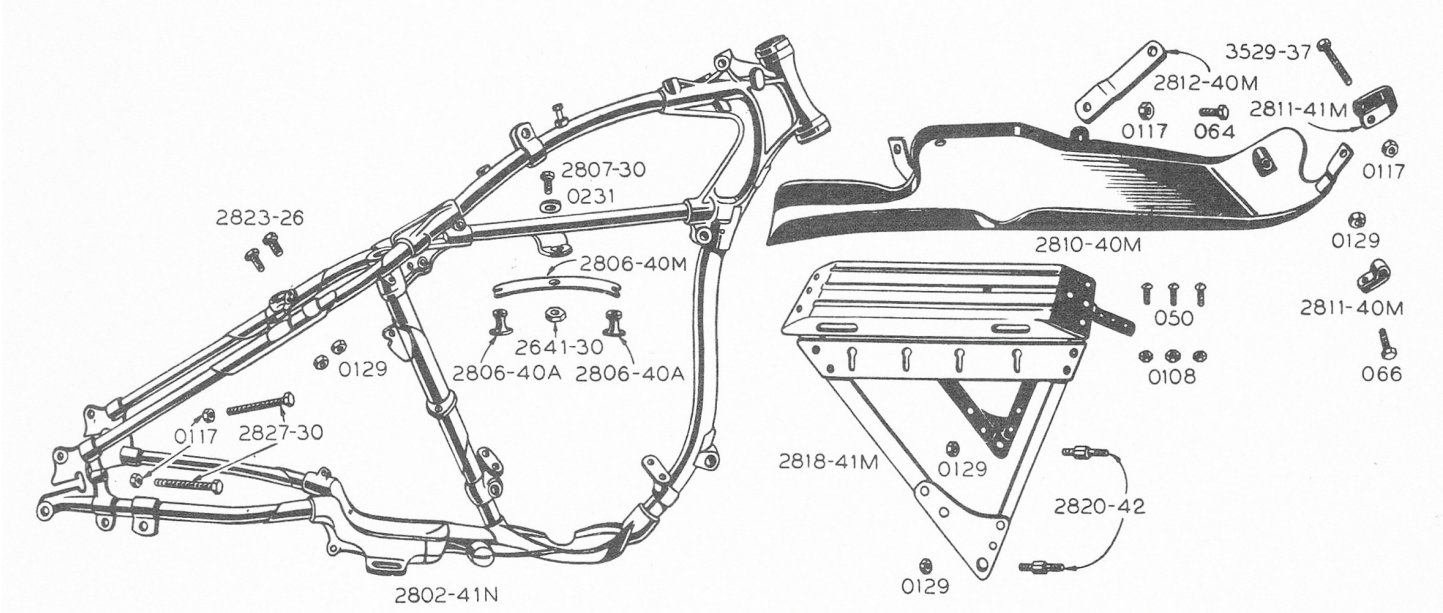

FRAME			
2802-41	47003-41	FRAME	$2200.00
2806-40	16856-40	CYLINDER HEAD TOP MOTOR MOUNT	$21.00
2806-40A	16860-40	CYLINDER HEAD TOP MOTOR MOUNT SPACER (2-REQ)	$16.00
2807-30	4620	TOP MOTOR MOUNT BOLT	$5.00
2641-30	7859	TOP MOTOR MOUNT BOLT NUT	$1.36
0231	6301	TOP MOTOR MOUNT SHIMS .025 (AS REQ)	$0.34
2823-26	4304	REAR FENDER BRACE BOLT	$3.07
0129	7798	BRACE BOLT NUT	$1.32
RR/FNDR/MT/KIT	9792-15	PARKERIZED REAR FENDER MOUNTING KIT COMPLETE	$42.00
RR/FNDR/MT/KIT	9791-15	CAD REAR FENDER MOUNTING KIT COMPLETE	$42.00
2837-30/PK	41575-30/PK	REAR AXLE ADJUSTING BOLT PARK	$7.00
2837-30/CD	41575-30/CD	REAR AXLE ADJUSTING BOLT CAD	$7.00
0117	7752	ADJUSTING BOLT NUT	$1.10
AXLE/ADJ/KIT/PK	9628-2	PARKERIZED REAR CHAIN ADJUSTERS	$11.95
AXLE/ADJ/KIT/CD	8479-2	CAD PLATED, HEAT TREATED REAR CHAIN ADJUSTERS	$11.95
2810-40M	2810-40M	SKID PLATE KIT INCLUDED 2812-40M AND 2811-41M	$280.00
2811-40M	2811-40M	SKID PLATE RIGHT FRONT CLAMP	$8.00
066	4000	CLAMP BOLT	$2.10
0129	7798	CLAMP BOLT NUT	$1.32
2811-41M	2811-40M	SKID PLATE CLAMP	$8.00
3529-37	4060	CLAMP BOLT	$2.00
0117	7752	CLAMP BOLT NUT	$1.10
2812-40M	2812-40M	LEFT SUPPORT BRACKET	$12.00
064	3974	SKID PLATE BOLT	$1.82
0117	7752	SKID PLATE NUT	$1.10
BOLT/KIT/PARK	2590-13	SKID PLATE MOUNTING KIT 1940-1942 WLA.	$16.00
2818-41M	2818-41M	LUGGAGE CARRIER MILATARY 4 HOLES PER SIDE	$230.00
2816-35	47409-35	LUGGAGE CARRIER CIVILIAN 2 SLOTS PER SIDE	N/A
050	2756	TOP CARRIER SCREW (3-REQ)	$1.40
0108	7691	TOP CARRIER NUT (3-REQ)	$1.00
2802-42	2802-42	LUGGAGE CARRIER STUD (2-REQ)	$12.00
0129	7789	LUGGAGE CARRIER STUD NUT (2-REQ)	$1.35
LUGG/INST/KIT	2348-2	LUGGAGE CARRIER FENDER MOUNTING STUDS NUTS AND WASHER	$14.00

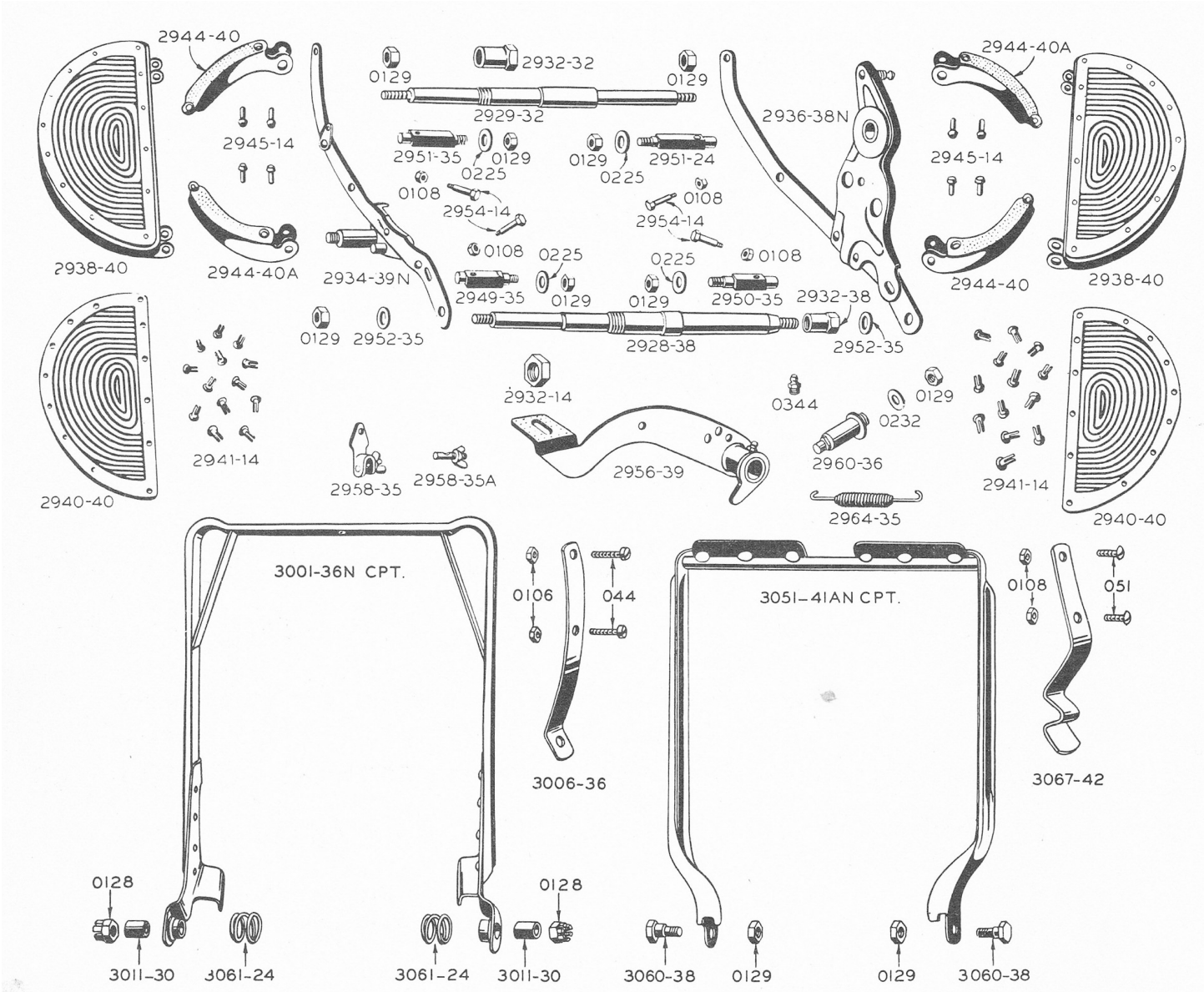

BOARDS/STANDS			
2928-38	50510-38	FRONT FOOTBOARD SUPPORT ROD	$24.00
2929-32	50511-32	REAR FOOTBOARD SUPPORT ROD	$24.00
2932-14	8038	FOOTBOARD SUPPORT ROD NUT LARGE	$8.00
2932-32	50516-32	SUPPORT ROD NUT REAR	$8.00
2932-38	50517-38	SUPPORT ROD NUT FRONT	$7.00
2934-39	50528-39	RIGHT FOOTBOARD SIDEBAR	$75.00
0344/PK	9851/PK	ZERK FITTING PARK	$2.50
0344/CD	9851/CD	ZERK FITTING CAD	$2.50
2936-38	50543-38	LEFT FOOTBOARD SIDEBAR	$125.00
0129	7789	SIDEBAR CLAMP NUT	$1.35
0105	7634	FOOTLEVER ROD NUT	$0.48
2938-40/SET/MBLK	50603-40/MIL/BK	FOOTBOARD SET MILITARY BLACK W/METAL PADS	$84.00
2934-40/SET/MOD	50603-40/MIL/OD	FOOTBOARD SET MILITARY OD GREEN W/METAL PADS	$95.00
2934-40/SET/CBLK	50603-40/CIL/BK	FOOTBOARD SET CIVILIAN BLACK W/RUBBER PADS	$64.00
2940-40M	2940-40M	FOOTBOARD PADS MILITARY BLACK METAL PR	$49.00
2940-40M/OD	2940-40M/OD	FOOTBOARD PADS MILITARY OD GREEN METAL	$59.00
3940-40C/REST	50614-40	FOOTBOARD PADS CIVILIAN CANVAS BACK HD EMBODSSED	$70.00

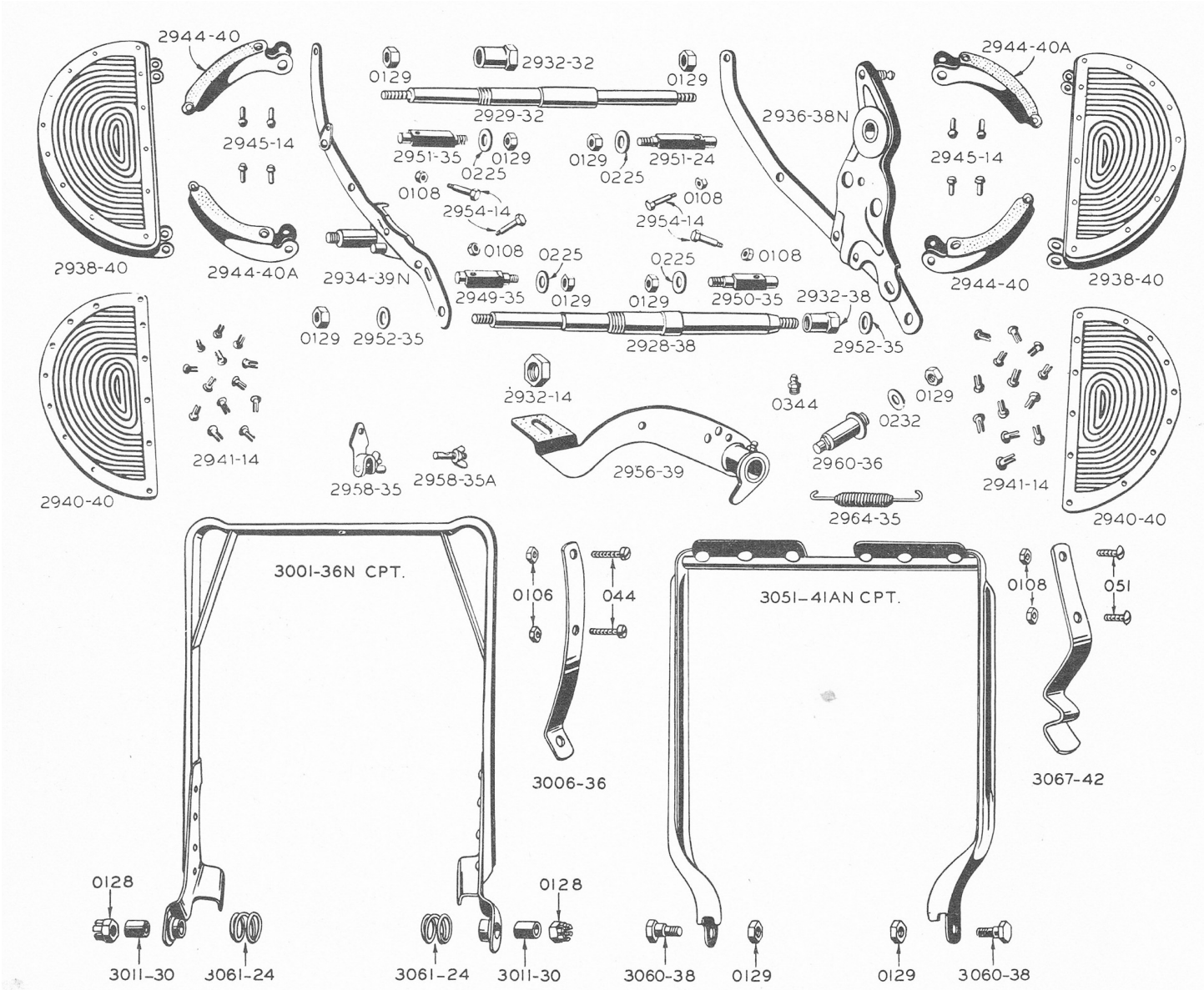

2941-14/SET	50616-14	FOOTBOARD PAD RIVET SET (26)	$6.00
2949-35	50653-35	FOOTBOARD STUD LEFT REAR	$8.00
2950-35	50651-35	FOOTBOARD STUD LEFT FRONT	$8.00
2951-24	50650-24	FOOTBOARD STUD RIGHT REAR	$8.00
2951-35	50652-35	FOOTBOARD STUD RIGHT FRONT	$8.00
0225	6400	FOOTBOARD STUD WASHER (4-REQ)	$0.44
2952-35	50668-35	FOOTBOARD STUD SPACING WASHER (2-REQ)	$3.00
0129	7789	FOOTBOARD STUD NUT (4-REQ)	$1.32
FB/MOUNT/KIT	2575-18	FOOTBOARD MOUNTING KIT ALL STUDS NUTS & WASHERS PARK	$38.00
2954-14	50635-14	FOOTBOARD HINGE BOLT (4-REQ)	$3.00
0108	7691	FOOTBOARD HINGE BOLT NUT (4-REQ)	$1.00
MOUNT KIT	9685-12	FOOTBOARD HINGE BOLT KIT BOLTS AND WASHERS PARK	$13.00
2956-39	42401-39	FOOTBRAKE LEVER BLACK	$42.00
2956-39/PK	42401-39/PK	FOOTBRAKE LEVER PARK	$42.00
2958-35	42280-35	BRAKE ROD LOCK KIT BLACK	$12.00
2958-36/PK	42280-35/PK	BRAKE ROD LOCK KIT PARK	$14.00
2958-36/CH	42280-35/CH	BRAKE ROD LOCK KIT CHROME	$10.00
2960-36	2315-6	BRAKE LEVER STUD STD	$25.00

2960-36/OS	2309-6	BRAKE LEVER STUD OVER SIZE	$25.00
0129	7789	BRAKE LEVER STUD NUT	$1.32
0232	6486	BRAKE STUD PLAIN WASHER	$0.78
2964-35	44484-35	BRAKE LEVER SPRING	$10.00
3001-36N		FRONT STAND	N/A
3006-36	49313-36	FRONT STAND CATCH	N/A
044		FRONT STAND CATCH BOLT	N/A
0106	7654	FRONT STAND CATCH BOLT NUT	$0.35
3011-30	49343-30	FRONT STAND COLLAR	N/A
0128	7809	FRONT STAND CASTELLATED NUT	$1.90
3061-24	49345-24	FRONT STAND SPRING	N/A
3051-41	49502-36	REAR STAND BLACK OR RAW	$150.00
3041-41/CH	49502-36/CH	REAR STAND CHROME	N/A
3060-38	49570-38	REAR STAND SHOULDERD BOLT	$8.00
0129	7789	REAR STAND SHOULDER BOLT NUT	$1.32
3067-42NOS	49581-36	REAR STAND CATCH NOS	$20.00
3067-42/RP	49581-36/RP	REAR STAND CATCH REPLICA	$15.00
051	2762	READ STAND CATCH BOLT (2-REQ)	$1.40
0108	7691	REAR STAND CATCH NUT (2-REQ)	$1.00

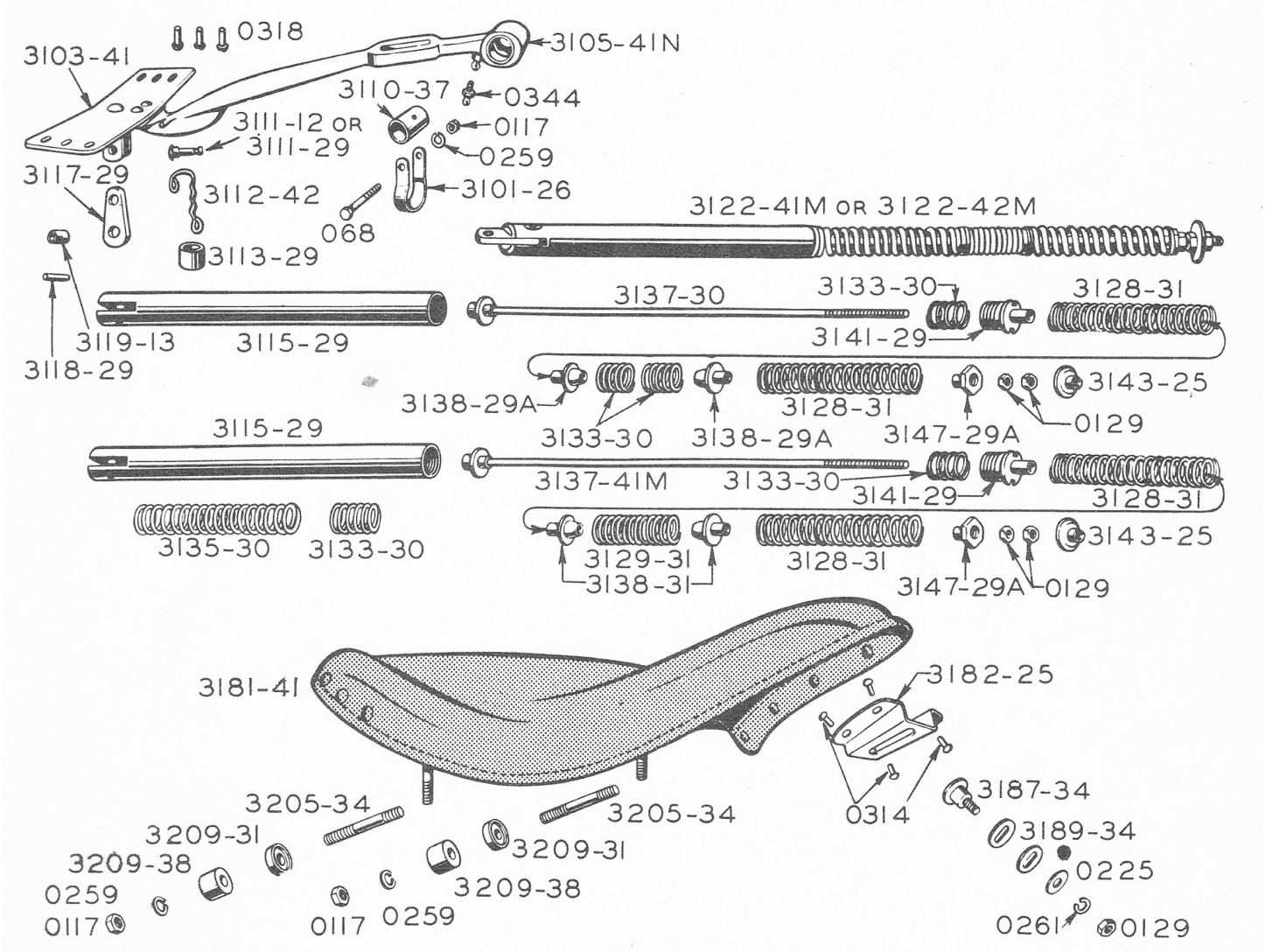

SEAT & SADDLE			
3101-26	47066-26	SEAT BAR BRACKET USA made	$185.00
3103-29	51911-29	SEAT BAR PLATE	N/A
0319	8580	SEAT BAR RIVET (3-REQ)	N/A
3105-41N	3105-41N	SEAT T BAR MILITARY	$185.00
3105-30	51990-30	SEAT T BAR CIVILIAN	$225.00
068	4042	SEAT T BOLT PARK	$2.75
0117	7752	SEAT T NUT PARK	$1.10
0259	7040	SEAT T BOLT LOCK WASHER PARK	$0.15
3110-37	51925-37	SEAT T BUSHING KIT	$23.95
3111-29	51918-29	SEAT BAR CLEVIS PIN	$2.00
3112-29	51920-29	CLEVIS PIN RETAINING SPRING	$2.00
3113-29	47581-29	SEAT POST BUSHING	$17.95
3115-29/PK	51625-29/PK	SEAT POST PLUNGER PARK	$99.95
3115-29/CD	51625-29/CD	SEAT POST PLUNGER CAD	$99.95
3117-29	51640-29	PLUNGER LINK	$14.95
3118-29	51642-29	PLUNGER LINK RIVET	$1.00
3119-13	51644-13	PLUNGER LINK BUSHING	$2.00
3121-30/PK	51600-30/PK	SEAT PLUNGER ASSEMBLY STD PARK	$129.00
3121-30/CD	51600-30/CD	SEAT PLUNGER ASSEMBLY STD CAD	$129.00

3128-29A	51771-29	SPRING SET STANDARD	$66.95
3128-31A	51772-31	SPRING SET HEAVY	$66.95
3129-31A	51775-31	CUSHION SPRING HEAVY	$90.00
3137-30	51660-30	SEAT POST ROD	$40.00
ROD/KIT	2659-10	SEAT POST ROD, NUTS AND SPACERS KIT	$75.00
3138-29A	51790-29	CUSHION SPRING GUIDE COLLAR HEAVY	$12.00
3138-31	51791-31	GUIDE COLLAR	$5.20
3141-29	51633-29	PLUNGER LOCK NUT	$17.00
3143-25	51627-25	SEAT POST ROD NUT	$8.00
3144-25	51674-25	ROD LOCK NUT	$4.00
3147-29A	51765-29	SPRING ADJUSTING NUT	$9.00
0129	7789	ADJUSTING NUT LOCK KUT	$1.32
0344/PK	9851/PK	STRAIGHT GREASE FITTING PARK	$2.50
0344/CD	9851/CD	STRAIGHT GREASE FITTING CAD	$2.50
3181-41	3181-41	MILATARY SOLO SADDLE BROWN	$350.00
3181-25	52004-25	CIVILIAN SOLO SADDLE BLACK	$350.00
3181-47	52006-47	CIVILIAN DELUXE SOLO SADDLE	$350.00
E/BASE PLATE		SEAT BASE PLATE ONLY NO VENT HOLES	$135.00
L/BASE PLATE		SEAT BASE PLATE ONLY WITH VENT HOLES	$135.00
3182-25	52060-25	SEAT POMMEL	N/A
0314	8515	POMMEL RIVETS (4-REQ)	$0.25
INST/KIT/PK	9696-18	PARKERIZED SADDLE TO SEAT TEE MOUNTING KIT	$28.95
INST/KIT/PCD	8873-18	CAD PLATED SADDLE TO SEAT TEE MOUNTING KIT	$28.95
3187-34	52098-24	FRONT SADDLE BOLT	$9.00
3189-34	52096-34	FRONT SADDLE CURVED WASHER (2-REQ)	$2.95
0225	6400	FRONT BOLT PLAIN WASHER	$0.44
0129	7789	FRONT BOLT NUT	$1.32
3205-34	52092-34	REAR SADDLE STUD (2-REQ)	$3.59
3209-31	52103-31	REAR STUD SPACER	$3.00
3209-38	52104-38	REAR STUD SPACER	$4.00
0117	7752	REAR STUD NUT	$1.10

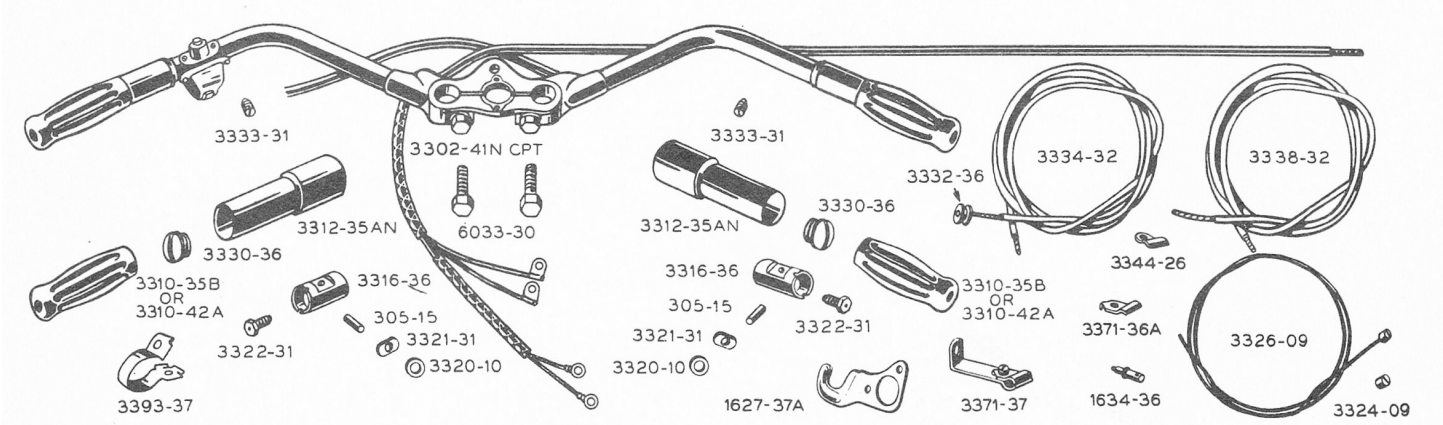

HANDLEBARS OLD			
3302-37	55901-37	STANDARD BUCKHORN BARS COMPLETE	$600.00
3302-37A	55903-37	SPEEDSTER BARS COMPLETE	$600.00
3307-36	55950-36	BUCKHORN BARS BARE	$430.00
3307-36A/BR	3307-36A/BRAZED	SPEEDSTER BARS BARE BRAZED 1936-MID 1946 INLINE	$379.00
3307-36A/WEL	3307-36AR/WELDED	SPEEDSTER BARS BARE WELDED LATE 1946-1952 INLINE	$379.00
3307-36A/REPAIR	3307-36AR/BARSONLY	SPEEDSTER BARS W/OUT CENTER CASTING	$160.00
3307-36A/CAST	3307-36AR/CETRCAST	HANDLEBAR CENTER CASTING INLINE	$279.00
6033-30	4636	CENTER BOLTS	$2.95
6033-30/SET	9508-4	CENTER BOLT KIT INCLUDES LOCK WASHERS	$5.95
3310-35/BLK	56204-35R/PR/BK	RESTORATION QUALITY BLACK SPRINGER GRIPS W/CANVAS	$63.95
3310-35/WH	56204-35R/PR/WH	RESTORATION QUALITY WHITE SPRINGER GRIPS W/CANVAS	$63.95
3312-35/CH	56245-35/CH	HANDLEBAR SPIRAL CHROME (2-REQ)	$69.99
3312-35/BK	56245-35/BK	HANDLEBAR SPIRAL BLACK (2-REQ)	$62.99
3312-35/OD	56245-35/OD	HANDLEBAR SPIRAL OD GREEN (2-REQ)	$62.99
3316-33A		HANDLEBAR PLUNGER KIT set of 2	$20.00
3316-36	56270-36	HANDLEGAR PLUNGER EACH	$17.95
3316-36/KIT	9505-2	HANDLEBAR PLUNGER PAIR	$31.95
305-15	9281	HANDLEBAR PLUNGER PIN	$2.25
3320-10	56278-10	PLAIN ROLLER	$2.29
3321-31	56281-31	PLAIN ROLLER BLOCK	$2.65
KIT	8923-8	ROLLERS, PINS AND CABLE ENDS FOR BOTH SIDES	$16.95
3326-09	56373-09	CONTROL WIRE	$6.00
3322-31	56283-31	CONTROL WIRE FASTENING SCREW	$3.20
3324-09	56420-09	CONTROL WIRE END	$1.60
3330-36	56287-36	HANDLEBAR END NUT	$7.50
3330-36KT	7626-2	HANDLEBAR END NUTS (2)	$13.95
3332-36	56274-36	1918-1948 THROTTLE & SPARK COIL SPOOL	$3.00
3333-31	56276-31	CONTROL COIL PLUG SET SCREW	$1.10
3334-32/VY	56502-32/PVC	THROTTLE & SPARK CONTROL COIL, PVC COMPLETE	$20.00
3334-32/CR	56502-32/CR	THROTTLE & SPARK CONTROL, COTTON BRAID COMPLETE	$54.95
3344-26	56495-26	CONTROL COIL CLAMP LEFT	$8.00
3345-26		CONTROL COIL CLAMP RIGHT SIDE	$8.00
035	1190	CONTROL COIL CLAMP SCREW	$0.50
3370-36	2667-5	CARBURETOR CONTROL KIT	$12.00

021	1062	CARBURETOR CONTROL CONNECTION SCREW	$0.50
3371-37	9006-4	CARBURETOR CONTROL COIL BRACKET KIT	$11.95
3371-36A	56604-36	CONTROL BRACKET CLAMP	$12.00
3393-37	56628-37	TIMER CONTROL COIL FRAME CLAMP	$9.00
042	1300	CONTROL BRACKET CLAMP SCREW	$0.56
0255	6400	CONTROL BRACKET CLAMP SCREW LOCK WASHER	$0.49
1627-37A/PK	32735-37/PK	TIMER CONTROL BRACKET PARK	$24.00
1627-37A/CD	32735-37/CD	TIMER CONTROL BRACKET CAD	$24.00
4162-30	9967	TIMER AND CARB CONTROL COIL CLAMP	$6.20

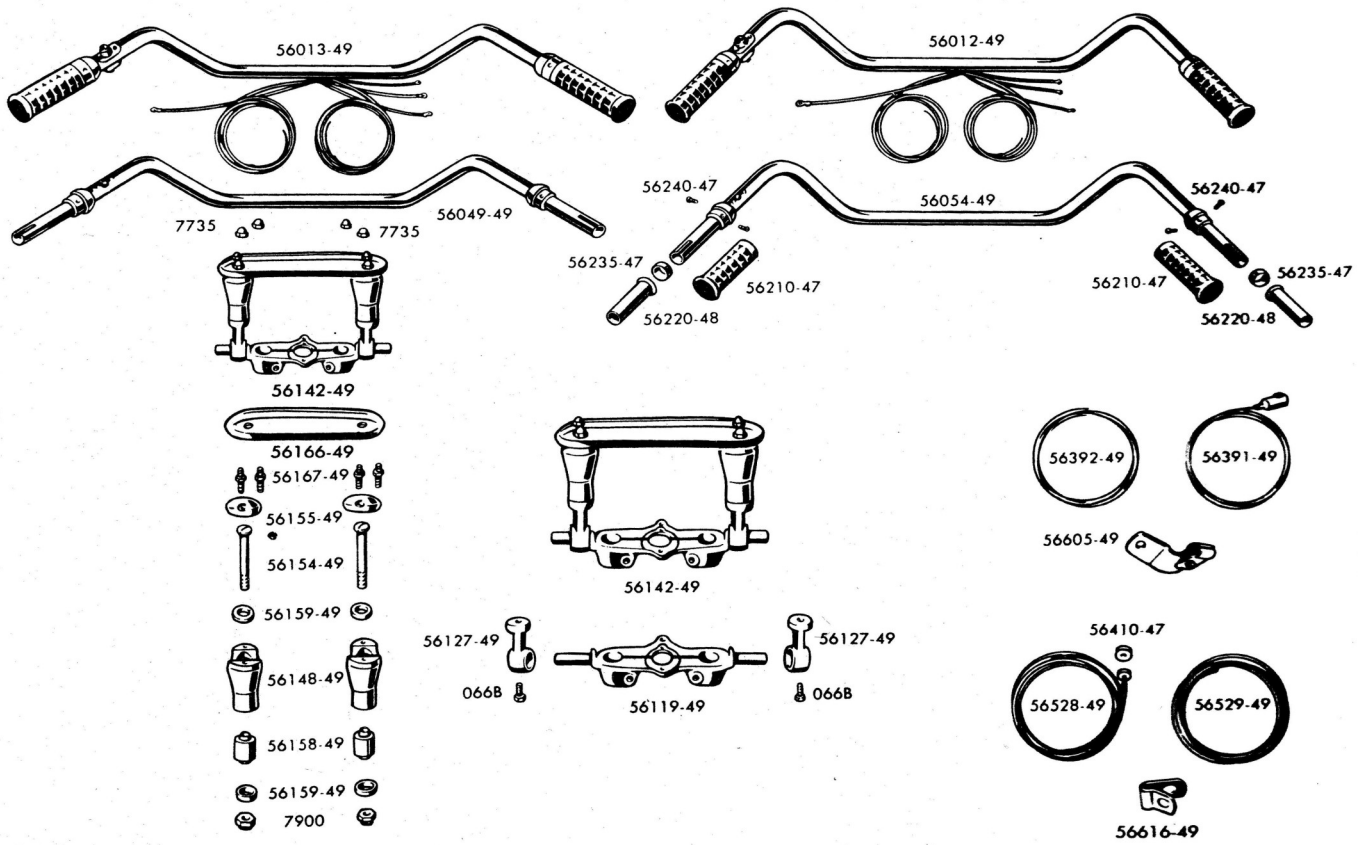

HANDLEBARS NEW			
56021-49	56021-49	BUCKHORN HANDLEBARS RUBBER MOUNT COMPLETE	$600.00
56013-49	56013-49	SPEEDSTER HANDLEBARS RUBBER MOUNT COMPLETE	$600.00
56049-49	56049-49	SPEEDSTER BARS BARE	$430.00
56054-49	56054-49	BUCKHORN BARS BARE	$430.00
56142-49	56142-49	SPRING FORK RISER KIT 1940 - 1952	$575.00
56119-49	56119-49	HANDLE BAR TRIPLE CLAMP	$325.00
066B	066B	RISER BRACKET BOLT	$6.00
56127-49	56127-49	RISER BRACKET (2-REQ)	$200.00
56148-49	56148-49	RISER WITH BUSHING (2-REQ)	$85.00
56158-49	56158-49	RISER RUBBER BUSHING (2-REQ)	$19.00
56154-49	56154-49	RISER MOUNTING SCREW	$12.00
7900	7900	RISER MOUNTING SCREW NUT	$5.00
2680-4	2680-4	RISER MOUNTING SCREW AND NUT KIT	$27.00
56155-49	56155-49	RISER CAP BARE	$26.00
56156-49	56156-49	RISER CAP CHROME	N/A
56166-49	56166-49	RISER LINK stainless	$160.00
56167-49	56167-49	RISER LINK MOUNTING STUD (4-REQ)	$22.00
7736	7736	RISER LINK MOUNTING STUD NUT (4-REQ)	$8.00
2147-8	2147-8	HANDLEBAR RISER COVER MOUNTING STUDS AND ACORN NUTS	$30.00
56210-47/BK	56210-47/BK	HANDLEBAR GRIP BLACK (PR)	$40.00
56210-47/RD	56210-47/RD	HANDLEBAR GRIP RED (PR)	$40.00
56210-47/WHT	56210-47/WHT	HANDLEBAR GRIP WHITE (PR)	$40.00
56235-47	56235-47	HANDLEBAR GRIP RETAINER	$17.99
56240-47	56240-47	GRIP RETAINER SCREW	$6.00

56392-49	56392-49	CONTROL WIRE	$6.00
56391-49	2304-2	CONTROL WIRE PLUNGER	$18.95
56528-49/PVC	56528-49/PVC	CONTROL COIL ASSEMBLY W/PLUG PVC	$20.00
56248-49/CR	56248-49/CR	CONTROL COIL ASSEMBLY W/PLUG CLOTH COVERED	$55.00
56616-49	56616-49	CARBURETOR CONTROL COIL CLIP (2-REQ)	

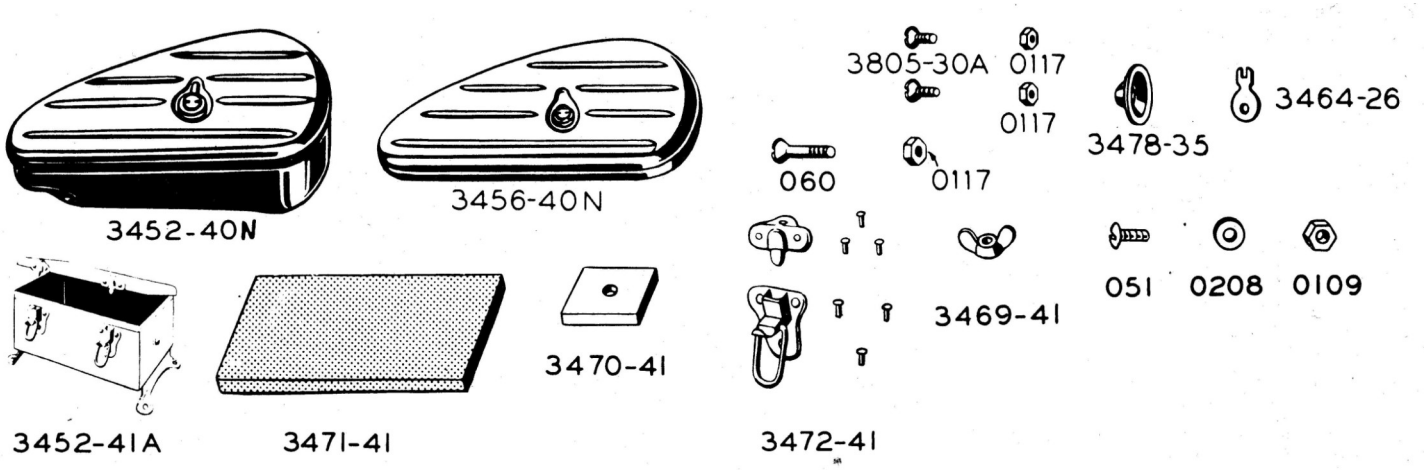

TOOL BOX			
3452-40N	3452-40N	TOOL BOX OD	$99.00
3452-41A	3452-41A	AUXILIARY TOOL BOX OD	$325.00
3456-40N	3456-40N	TOOL BOX COVER OD	N/A
3456-41	3456-41	AUXILIARY TOOL BOX COVER OD	N/A
3805-30A	2398	TOOL BOX MOUNTING SCREW (2-REQ)	$3.00
0117	7752	TOOL BOX MOUNTING NUT (4-REQ)	$1.10
3464-26	64340-26	TOOL BOX KEY	$5.00
3467-41N	3467-41N	TOOL BOX MOUNTING BRACKET	$40.00
060	060	TOOL BOX BOLT	$3.00
3478-35	64472-35	TOOL BOX SCREW WASHER (2-REQ)	$4.00
3469-41	3469-41	AUXILIARY TOOL BOX WING NUT	N/A
3470-41	3470-41	AUXILIARY TOOL BOX RUBBER PAD	N/A
3471-41	3471-41	AUXILIARY TOOL BOX LID RUBBER PAD	N/A
3472-41	3472-41	AUXILIARY TOOL BOX COVER LATCH	N/A
051	2762	AUXILIARY TOOL BOX MOUNTING SCREW (4-REQ)	$1.40
0208	6240	AUXILIARY TOOL BOX MOUNTING SCREW WASHER (4-REQ)	$0.28
0109	7695	AUXILIARY TOOL BOX MOUNTING SCREW NUT (4-REQ)	$1.00

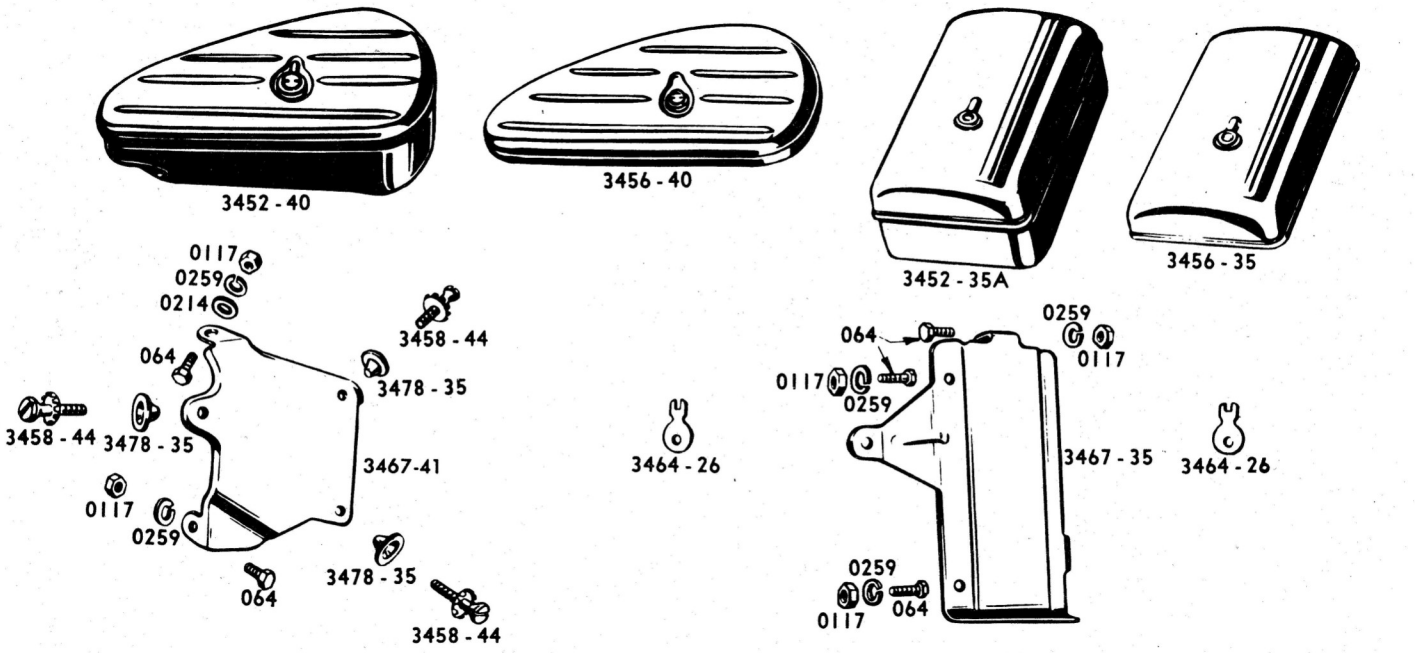

TOOL BOX			
3452-35A	3452-35A	TOOL BOX BLACK 1935-1940	$175.00
3452-40	64205-40R	TOOL BOX BLACK 1941 AND LATER	$62.00
3452-40/CHR	64205-40CR	TOOL BOX CHROME 1941 AND LATER	$64.00
3457-40	64474-40	TOOL BOX MOUNTING SPACER	$7.00
3458-44	2424	TOOL BOX SCREW--set of 3	$9.00
0117	7752	TOOL BOX MOUNTING SCREW NUT	$1.10
3464-26	64340-26	TOOL BOX KEY	$5.00
3467-35	3467-35	TOOL BOX MOUNTING BRACKET 1935-1940	N/A
3467-41	64450-41	TOOL BOX MOUNTING BRACKET 1941-1952	$40.00
064	3974	BRACKET TO FRAME BOLT 1935-1940	$1.82
3478-35	64472-35	TOOL BOX SCREW WASHER	$4.00
KIT/PK	9669-9	PARKERIZED TOOL BOX MOUNTING KIT 1935-1954	$20.50
KIT/CD	8206-9	CAD TOOL BOX MOUNTING KIT 1935-1954	$20.50

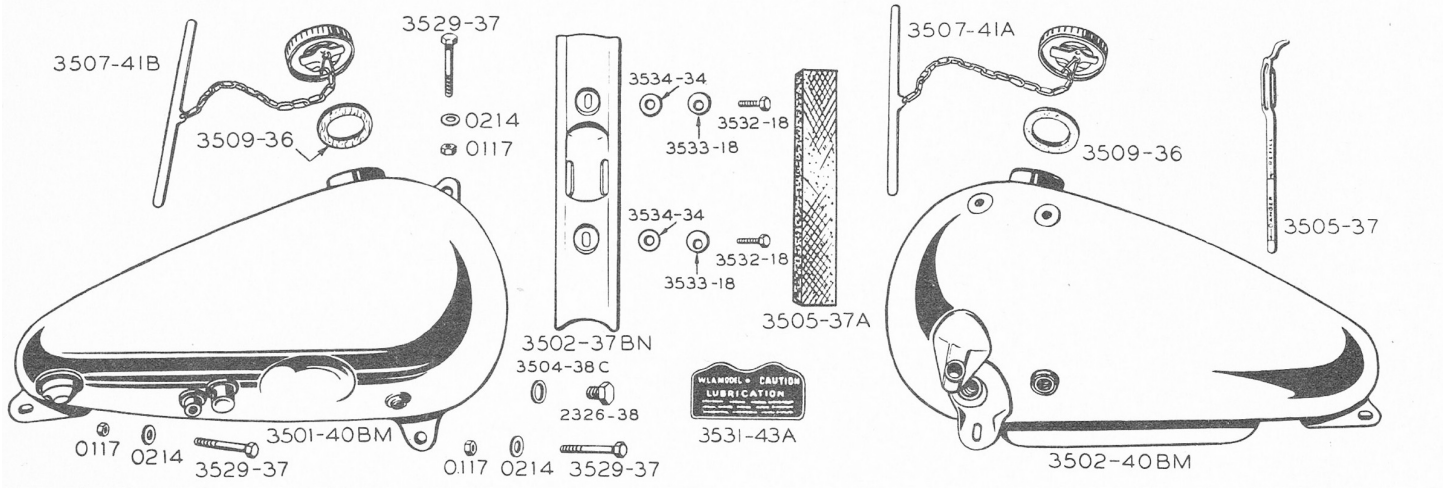

GAS TANK GROUP	MILITARY		
3501/3502-40BM	3501/3502-40BM	GAS & OIL TANK BARE	$900.00
3502-37BN	61120-37	TANK TOP STRIP	$29.00
3505-37	62631-37	OIL TANK GAUGE ROD (DIPSTICK)	$24.95
2326-38	704	DRAIN PLUG	$4.65
3504-38C	6700	DRAIN PLUG GASKET	$1.00
3505-37A	61124-37	TANK BUFFER	N/A
3507-41B	3507-41B	GAS TANK CAP OD WITH CHAIN	$55.00
3507-41A	3507-41A	OIL TANK CAP OD WITH CHAIN	$55.00
3509-36	61113-36	TANK CAP WASHER CORK	$2.00
3509-36A	61112-37	TANK CAP WASHER LEATHER	$5.00
3529-37	4060	TANK MOUNT BOLT (3-REQ)	$1.97
0214	6320	WASHER (3-REQ)	$0.35
0117	7752	TANK BOLT NUT (3-REQ)	$1.10
KIT/PK	9896-12	GAS TANK MOUNTING KIT PARK 1937-1952	$11.00
KIT/CD	9895-12	GAS TANK MOUNTING KIT CAD 1937-1952	$11.00
3532-18	3665	TOP OF TANK SCREW	$6.00
3532-18S	3666	TOP OF TANK SCREW OVERSIZE	$6.00
3533-18	61820-18	TANK SCREW SPRING WASHER	$3.00
3534-34	6207	TANK SCREW PAPER WASHER	$2.00
3531-41	WLA/DP/EARLY	EARLY DATA TAG	$35.00
3531-43	WLA/DP/LATE	LATE DATA TAG	$35.00

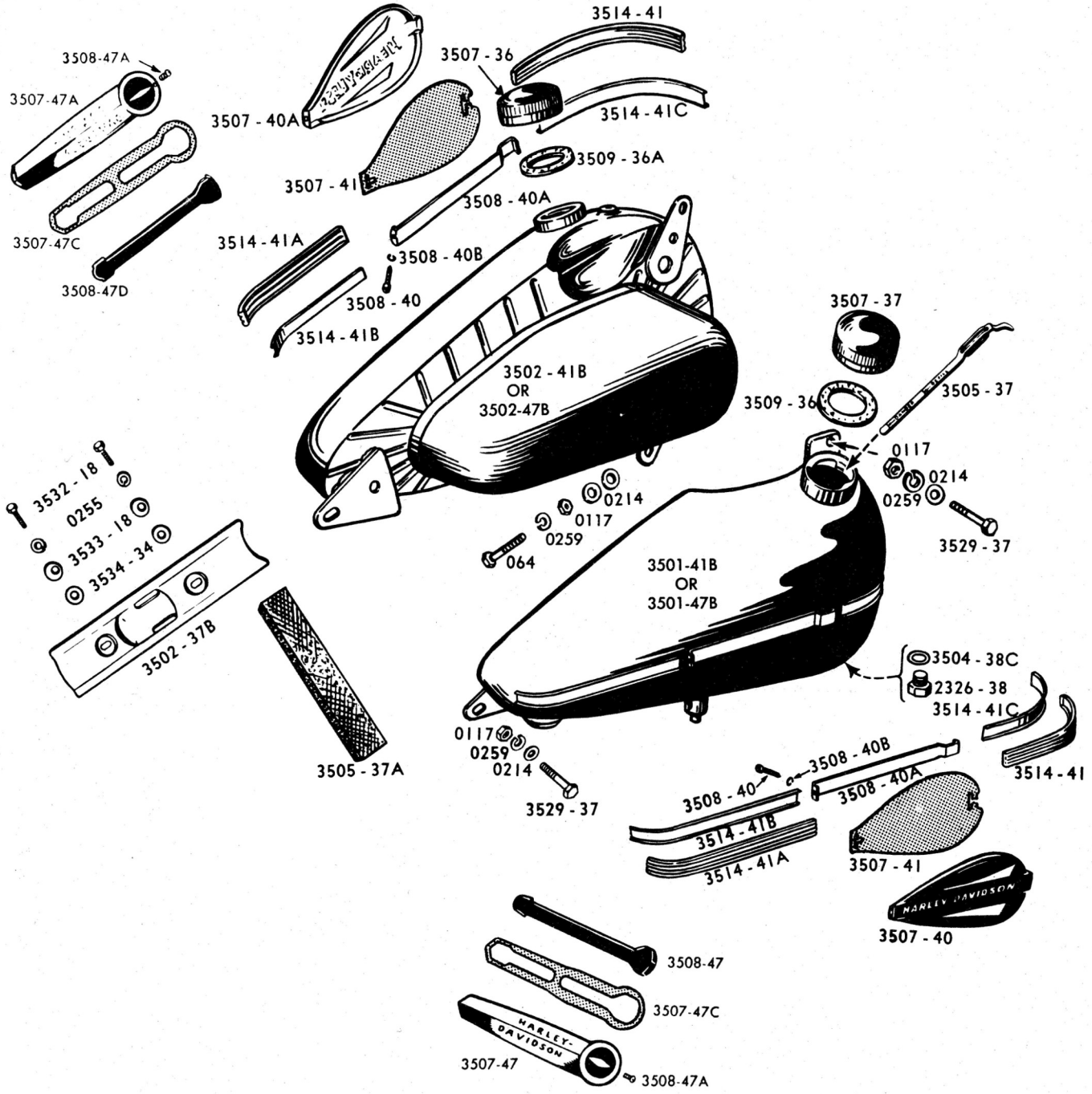

GAS TANK GROUP	CIVILIAN		
L&R TANKS	3501-41B/3502-41B	GAS AND OIL TANK SET	$900.00
3502-37CD	61120-37CD	TOP TANK FILLER STRIP- painted	$29.00
3502-37PK	61120-37PK	TOP TANK FILLER STRIP PARK	N/A
3502-37CH	61120-37CH	TOP TANK FILLER STRIP CHROME	N/A
3505-37	62631-37	OIL TANK GAUGE ROD (DIPSTICK)	$24.95
3505-37A	61124-37	TANK BUFFER	N/A
2326-38	704	DRAIN PLUG	$4.65
3504-38C	6700	DRAIN PLUG GASKET	$1.00
3507-36/S	61103-36R/36-41	SHORT KNURL GAS CAP CHROME	$61.99
3507-36/T	61103-36R/40-57	TALL KNURL GAS CAP CHROME	$61.99
3507-37	61104-37	OIL TANK CAP CHROME	$54.99

3507-40/KIT	61769-40	SET OF GAS TANK NAME PLATES 1940-1946	$50.00
3407-47/KIT	61769-47	SET OF GAS TANK NAME PLATES 1947-1950	$48.00
3507-41/PR	61792-41	SET OF NAME PLATE GASKETS 1940-1946	$14.00
3507-47/PR	61792-47	SET OF NAME PLATE GASKETS 1947-1950	$14.00
3508-40/PR	61784-40	SET OF WELD ON NAME PLATE BRACKETS 1940-1946	$33.00
3508-47/PR	61784-47	SET OF WELD ON NAME PLATE BRACKETS 1947-1950	$30.00
3514-41/3514-41A	61800-41	SET OF STAINLESS FRONT AND REAR TANK STRIPS (4-PC)	$45.00
3541-41B/3541-41C	61802-41	SET OF WELD ON STRIP BRACKETS (4-PC)	$35.00
3509-36	61113-36	TANK CAP WASHER CORK	$2.00
3509-36A	61112-37	TANK CAP WASHER LEATHER	$5.00
3529-37	4060	GAS AND OIL TANK MOUNT BOLTS (3-REQ)	$1.97
0214	6320	WASHER (3-REQ)	$0.35
0117	7752	TANK BOLT NUT (3-REQ)	$1.10
TANK MNT KIT	9896-12	GAS TANK MOUNTING KIT PARKERIZED	$11.00
3532-18	3665	TOP OF TANK SCREW	$6.00
3532-18S	3666	TOP OF TANK SCREW OVERSIZE	$6.00
3533-18	61820-18	TANK SCREW SPRING WASHER	$3.00
3534-34	6207	TANK SCREW PAPER WASHER	$2.00
5918-08	5918-08	OIL TANK TRASFER	N/A

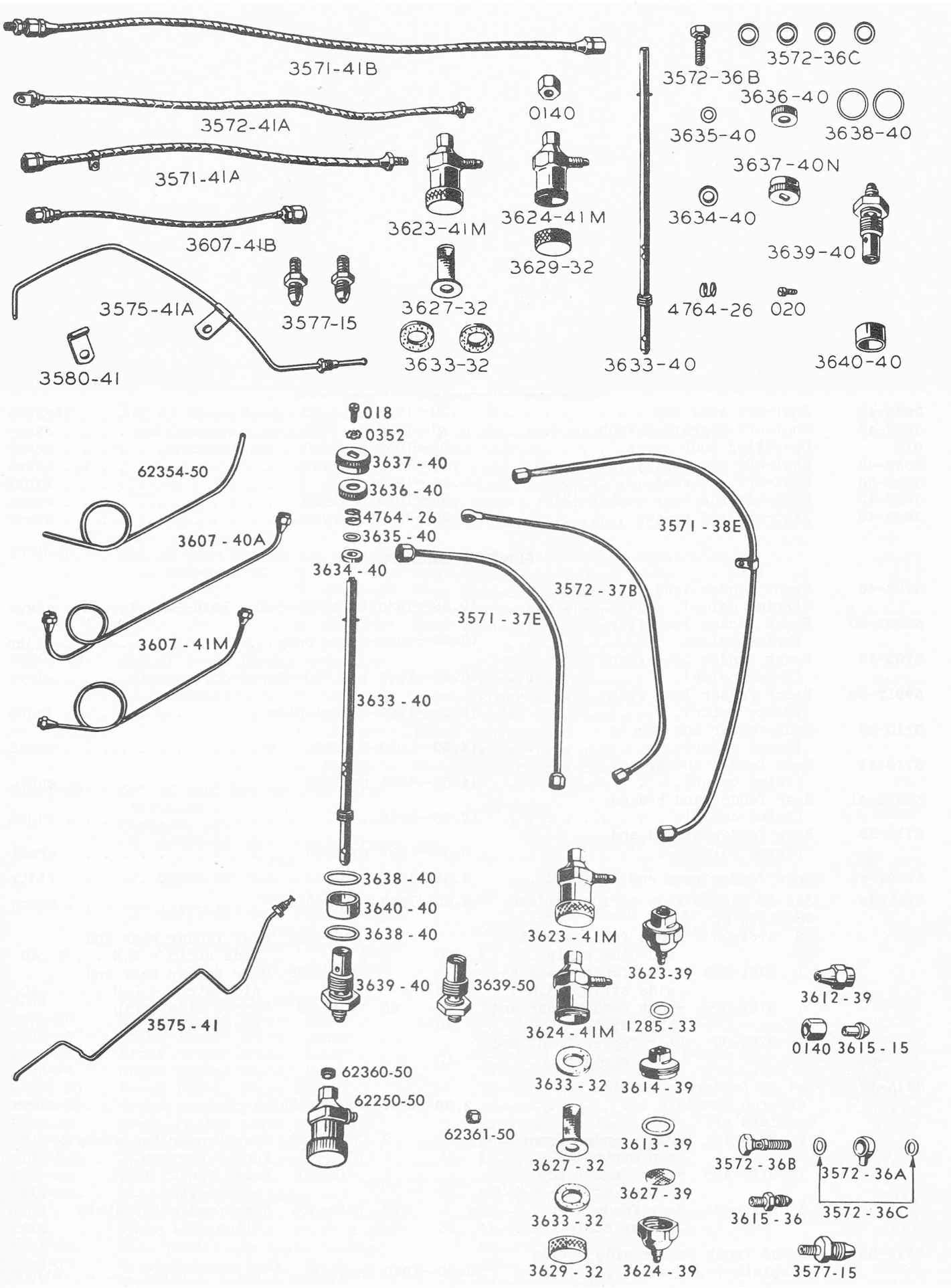
3571-41B
3572-41A
3571-41A
3607-41B
3575-41A
3580-41
3577-15
3623-41M
0140
3624-41M
3629-32
3627-32
3633-32
3572-36B
3572-36C
3636-40
3635-40
3638-40
3637-40N
3634-40
3639-40
4764-26
020
3633-40
3640-40
018
0352
3637 - 40
3636 - 40
4764 - 26
3635 - 40
3634 - 40
62354-50
3607 - 40A
3607 - 41M
3633 - 40
3571 - 38E
3572 - 37B
3571 - 37E
3638 - 40
3640 - 40
3638 - 40
3639 - 40
3639-50
3575 - 41
62360-50
62250-50
62361-50
3623 - 41M
3624 - 41M
3623-39
1285 - 33
3633 - 32
3614 - 39
3627 - 32
3613 - 39
3627 - 39
3633 - 32
3629 - 32
3624 - 39
3612 - 39
0140
3615 - 15
3572 - 36B
3572 - 36A
3615 - 36
3572 - 36C
3577-15

OIL & GAS LINES	WLC, WLA WL SOLO		
3571-41A	3571-41A	OIL FEED LINE WLC & RACER	$50.00
3571-41B	3571-41B	OIL PUNP RETURN LINE WLC & RACER	$50.00
3572-41A	3572-41A	OIL TANK VENT LINE WLC & RACER	$50.00
3571-37E		OIL FEED LINE WLA & CIVILIAN	$22.00
3571-38E		OIL PUMP RETURN LINE WLA & CIVILIAN	$22.00
3572-37B		OIL TANK VENT LINE WLA & CIVILIAN	$22.00
KIT	1937-73/WL/OIL/LN/KIT	1937-1973 45CI OIL LINE KIT WLA & CIVILIAN	$65.00
3577-15	63533-15	NIPPLE FOR 3571-41A & 3571-41B CAD	$6.36
3572-36B	63578-36	NIPPLE BOLT FOR VENT LINE CAD	$7.00
3572-36C	6440	BRASS WASHER NIPPLE BOLT (4-REQ)	$1.60
3615-36	25235-36	CRANKCASE OIL TANK VENT NIPPLE	$6.38
3575-41A	3575-41A	REAR CHAIN OILER TUBE	$18.00
3570-41	3570-41	REAR CHAIN OILER TUBE CLIP	$6.00
3607-40A	3607-41A	GAS LINE WLA & CIVILIAN 1940-1941	$25.00
3607-41B	3607-41B	GAS LINE WLC	$22.00
3607-41M	3607-41M	GAS LINE WLA & CIVILIAN 1942-1949	$26.26
62354-50	62354-50	GAS LINE 1950 AND LATER	$25.00
0140	63371-15	GAS LINE NUT VALVE END	$3.18
62360-50	62360-50	GAS LINE RUBBER SLEEVE (2-REQ)	$0.70
62361-50	62361-50	GAS LINE NUT 1950 & LATER	$3.00
3623-39	9661-1	GAS STRAINER ASSEMBLY 1939-1941	$55.00
3623-41M	9660-1	GAS STRAINER COMPLETE 1942-1949	$70.00
62250-50	9662-1	GAS STRAINER ASSEMBLY 1950 & LATER	$70.00
3624-41M	62253-41	GAS STRAINER BASE	$24.00
3627-32	62285-32	GAS STRAINER SCREEN	$20.00
3629-32	62268-32	GAS STRAINER CAP	$12.00
3633-32	62270-32	GAS STRAINER CORK WASHER	$1.00
3633-40	62032-40	GAS VALVE ADJUSTING ROD	$26.95
3634-40	62094-40	GAS VALVE UPPER SEAT SEAL	$3.90
3635-40	6307	GAS VALVE ADJUSTING ROD WASHER	$0.70
4764-26	71804-26	GAS VALVE ADJUSTING ROD SPRING	$2.60
3636-40	62091-40	GAS VALVE UPPER SEAT CAP	$4.00
3637-40N/PK	62051-40/PK	GAS VALVE ADJUSTING ROD KNOB PARK	$13.95
3637-40/CH	62051-40/CH	GAS VALVE ADJUSTING ROD KNOB CHROME	$13.95
3637-40/BR	62051-40/BR	GAS VALVE ADJUSTING ROD KNOB BRASS	$13.95
020	1052	SCREW WLC PARK	$0.46
018	018	SCREW WLA PARK	$1.00
018	2626W	SCREW ALL CAD	$0.37
3638-40	62085-40	GAS VALVE WASHER (2-REQ)	$1.39
3639-40/PK	62075-40/PK	GAS VALVE NIPPLE PARK	$40.00
3640-40/PK	62096-40/PK	GAS VALVE SPACER PARK	$3.85
3640-40/CD	62096-40/CD	GAS VALVE SPACER CAD	$3.85

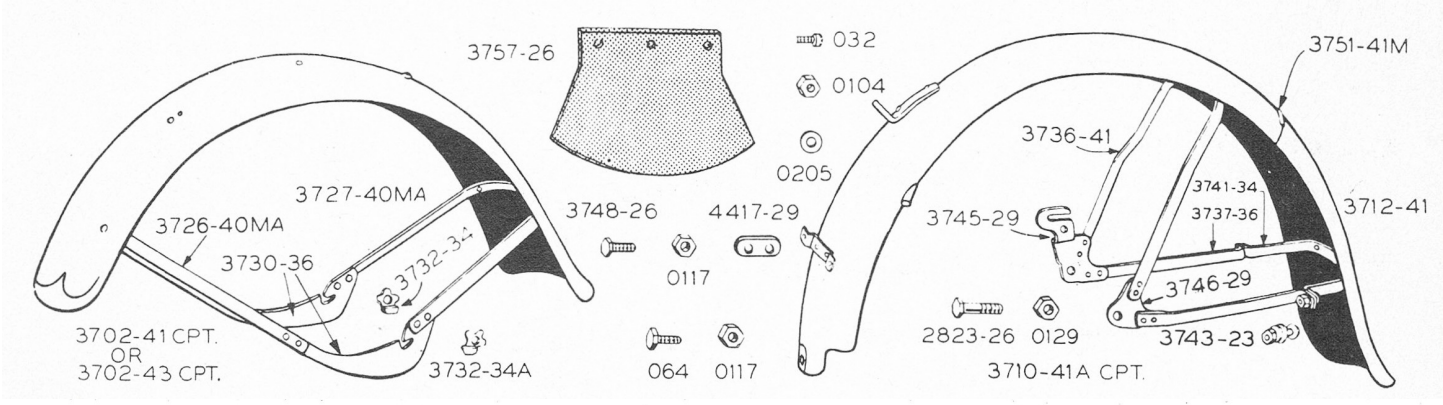

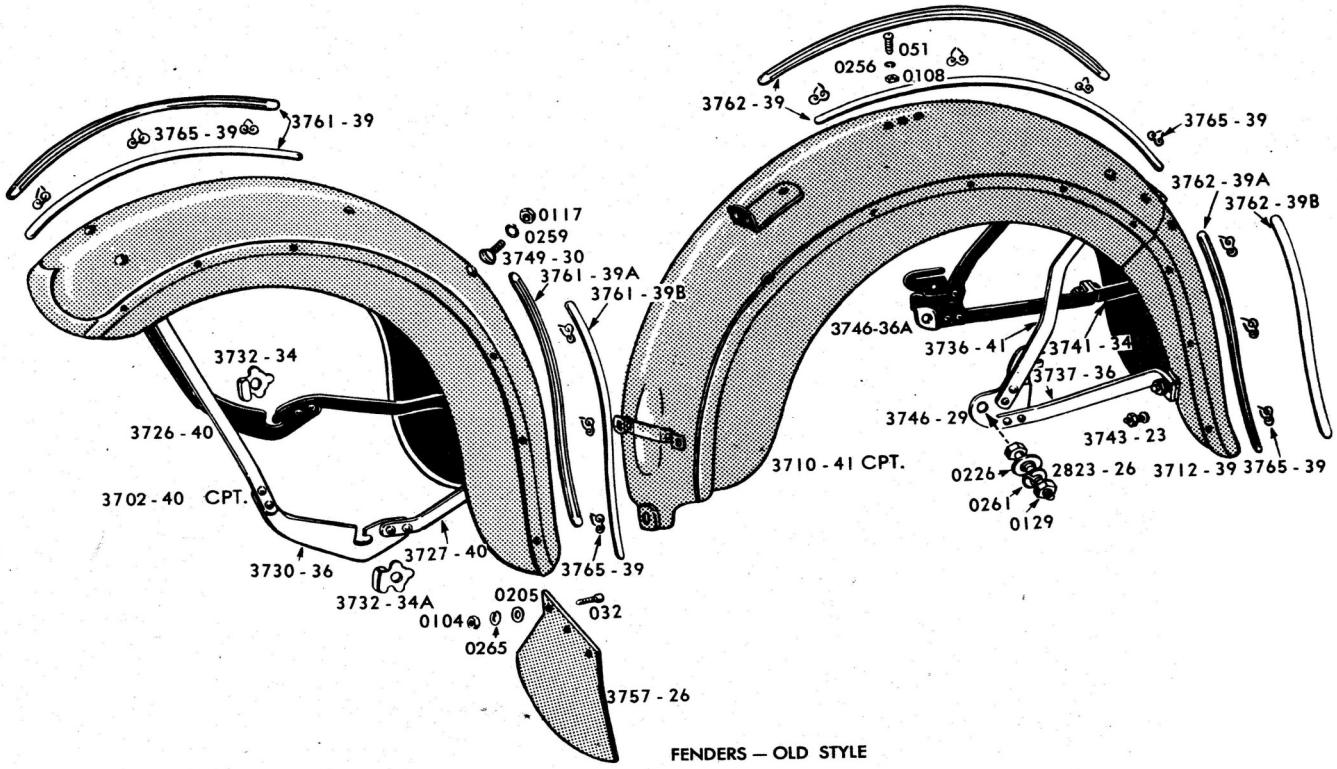

FENDERS — OLD STYLE

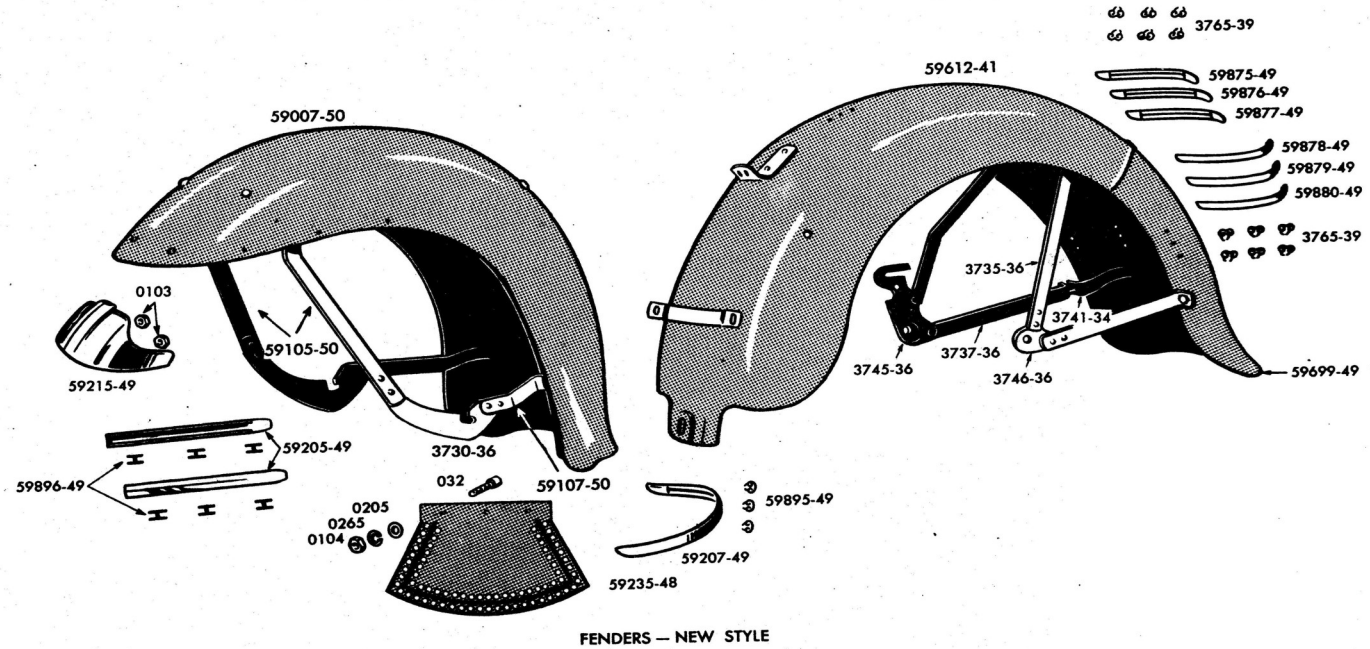

FENDERS — NEW STYLE

FENDERS			
3702-41		FRONT FENDER 1942 WLC	$600.00
3702-43		FRONT FENDER 1943 WLC	$600.00
3702-40M		FRONT FENDER 1940 WLA	$600.00
3702-40		FRONT FENDER CIVILIAN 1940-1949 SOLO	$600.00
59007-50		FRONT FENDER CIVILIAN 1950-1952	N/A
3702-42M		FRONT FENDER 1941 & LATER WLA	$600.00
3716-39	53900-39F	SET OF FRONT FENDER STAINLESS SIDE TRIM	$60.00
KIT/PARK	9680-6	PARKERIZED FRONT FENDER MOUNTING KIT WLC	$18.00
3717-39	59200-39R	SET OF REAR FENDER STAINLESS SIDE TRIM	$60.00
59874-49	59874-49	REAR FENDER SARGENT STRIPES	$100.00
59204-49	59204-49	FRONT FENDER TRIM 1949-1952	$75.00
0103	7608	FENDER TIP NUTS	$0.29
3710-41M	3710-41M	REAR FENDER MILITARY	$600.00
3710-41	59609-41	REAR FENDER CIVILIAN 1941-1949	$600.00
59612-41	59216-41	REAR FENDER CIVILIAN 1950-1952	N/A
3712-39	59699-39	REAR FLIP CIVILIAN 1939-1949	$225.00
3712-41	3712-41	REAR FLIP WLC	N/A
59699-49	59699-49	REAR FLIP CIVILIAN 1950-1952	N/A
3712-41M	3712-41M	REAR FLIP WLA	$200.00
3726-40MA	3726-40MA	FRONT BRACE FRONT FENDER WLC	$75.00
3726-44M	3726-44M	FRONT BRACE FRONT FENDER WLA	$75.00
2726-40	59107-40	FRONT BRACE FRONT CIVILIAN 1940-1949	$75.00
59105-50	59105-50	FRONT BRACE FRONT CIVILIAN 1950-1952	$75.00
3727-40MA	3726-40MA	REAR BRACE FRONT FENDER WLC	$50.00
3727-40	59105-40	REAR BRACE FRONT FENDER CIVILIAN 1940-1949	$50.00
3727-44M	3726-44M	REAR BRACE FRONT FENDER WLA	$47.00
59107-50	59107-50	REAR BRACE FRONT FENDER CIVILIAN 1950-1952	$47.00
3730-36	59135-36	FRONT FENDER BRACE CLIP (2-REQ)	$217.00
3732-34	59140-34	BRACE CLIP LOCK RIGHT	$7.20
3732-34A	59142-34	BRACE CLIP LOCK LEFT	$7.20
KIT	8009-2	BRACE CLIP LOCK KIT	$11.50
3736-41	59767-41	REAR FENDER BRACE TOP ALL	N/A
3737-36	59761-36	REAR FENDER FLIP BRACE ALL (2-REQ)	$40.00
3741-34	59737-34	REAR FENDER END BRACKET BRACE	$20.00
3743-23/KIT	2460-2	REAR FENDER BRACE BRACKET BOLT KIT ALL	$12.00
0111	7748	HEXAGON NUT PARKERIZED 5/16-18 N.C. x 17/64 x 1/2"	$1.05
0308	5923	RIVETS FOR BRACES AND CLIPS (8-REQ)	$2.00
0314	8521	RIVETS FENDERS TO BRACES (10-REQ)	$1.79
3746-36A	59781-36	REAR FENDER BRACE CLIP RIGHT	$9.00
3746-29	59780-29	REAR FENDER BRACE CLIP LEFT	$9.00
3748-26	4012	REAR FENDER SUPPORT BOLT (2-REQ)	$1.47
0117	7760	FENDER NUT	$1.10
3749-30	2404	FRONT FENDER OVAL HEAD BOLT	$3.50
4417-29	66308-29	REAR BOLT PLATE	$7.00
3751-39	59851-39	REAR FENDER HINGE CIVILIAN 1939-1947	N/A
3751-48	59853-48	REAR FENDER HINGE CIVILIAN 1948-1952	N/A
3751-41M	3751-41M	REAR FENDER HINGE MILITARY	$43.95
3752-30	59826-30	HINGE PIN	$6.00
0314	8521	RIVETS FENDERS TO BRACES (10-REQ)	$1.79
064	3974	REAR FENDER LOWER END BOLT (2-REQ)	$1.82
2823-26	4304	REAR FENDER BRACE BOLT (2-REQ)	$3.07
0129	7789	NUT (2-REQ)	$1.32
3757-26/BR	59235-26/BR	FRONT FENDER MUD FLAP BROWN LEATHER	$40.00
3757-26/BK	59235-26	FRONT FENDER MUD FLAP BLACK LEATHER	$18.95
032	1206	MUD FLAP BOLT (3-REQ)	$0.50
0104	7620	MUD FLAP NUT (3-REQ)	$0.33
0205	6203	MUD FLAP WASHER	$0.28
KIT	3757-26A/KIT	FRONT FENDER NUD FLAP MOUNTING KIT	$6.89

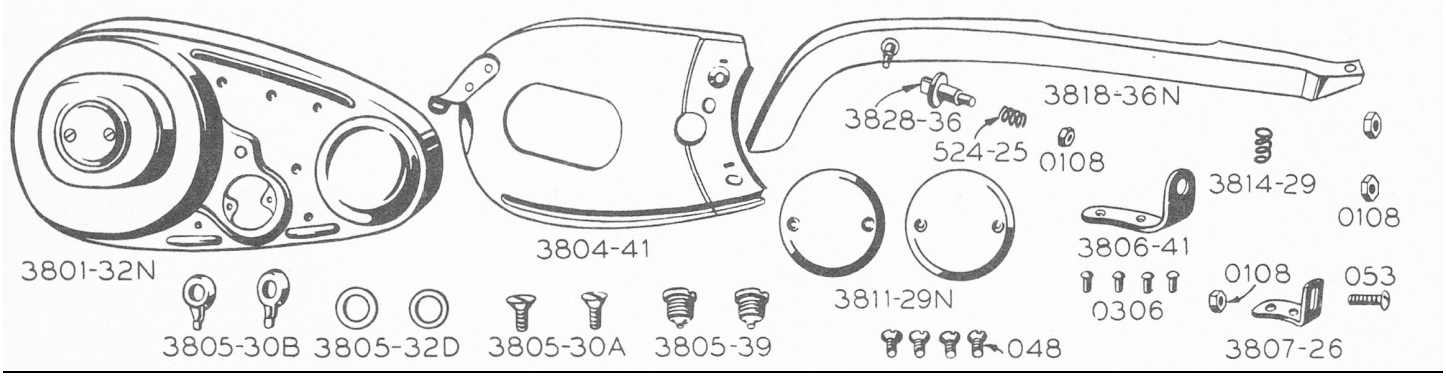

CHAIN GUARDS			
3801-32N	60504-32	OUTER PRIMARY CHAIN COVER painted	$155.00
3804-41	60621-41	INNER PRIMARY CHAIN GUARD	$60.00
KIT	8627-9	INNER/OUTER PRIMARY MOUNTING KIT	$19.00
3805-30A	2398	INNER GUARD SCREW (2-REQ)	$5.00
3805-30B	60630-30	INNER GUARD SCREW LOCK (2-REQ)	$4.45
3805-39	60648-39	CRANKCASE CHAIN GUARD SCREW PLUG (2-REQ)	$12.00
3805-32D	60650-32	SCREW BUSHING WASHER (2-REQ)	$8.00
KIT	2521-4	FRONT CHAIN GUARD INNER PRIMARY COVER MOUNTING KIT	$13.95
3806-41	60638-41	CHAIN GUARD BACK REAR BRACKET	N/A
0306	8512	BRACKET RIVET (4-REQ)	N/A
3807-26	60542-26	FRONT CHAIN GUARD REAR BRACKET	$4.00
053	2775	FRONT CHAIN GUARD SCREW	$1.50
0108	7691	NUT FOR 053	$0.96
3811-29N	60569-29	CHAIN INSPECTION HOLE COVER	$12.00
048	2268	COVER SCREWS	$1.30
3814-29	60640-29	CHAIN GUARD BACK SPRING	$5.00
3818-36N	60303-36	REAR CHAIN GUARD	$55.00
KIT	9746-7	PARKERIZED REAR CHAIN GUARD MOUNTING KIT	$6.00
KIT	9745-7	CAD PLATED REAR CHAIN GUARD MOUNTING KIT	$6.00
KIT	9744-7	CHROME PLATED REAR CHAIN GUARD MOUNTING KIT	$7.00
524-25	60350-36	FRONT STUD SPRING FOR REAR GUARD	$6.00
0108	7691	FRONT STUD NUT	$0.96
3745-29	59780-36	REAR CHAIN GUARD BRACKET	N/A
3828-36	60346-36	REAR CHAIN GUARD BRACKET STUD	$14.00
0108	7691	BRACKET NUT	$0.96

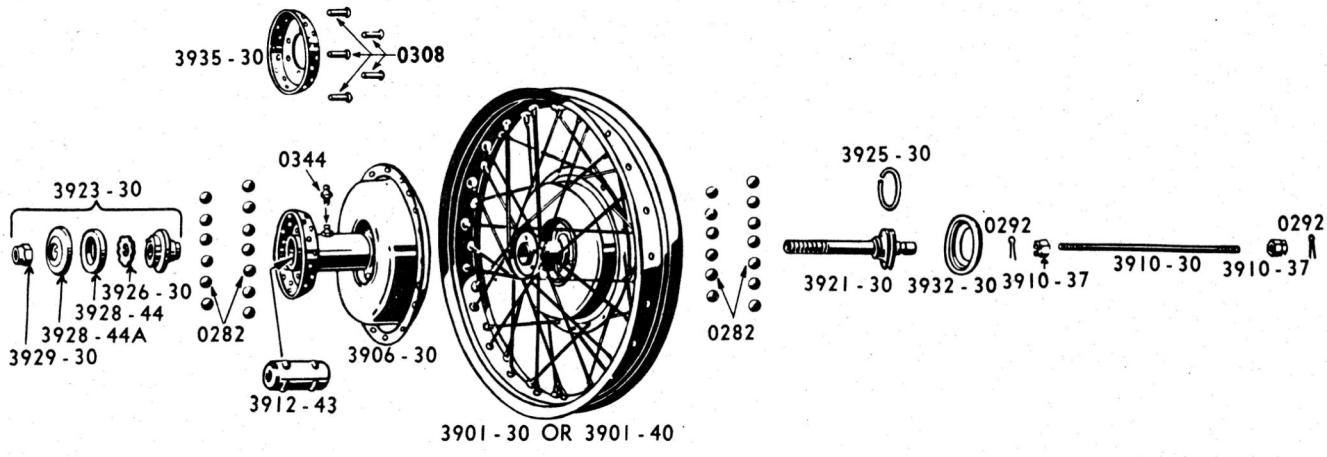

WHEELS RIMS AND	SPOKES		
3940-35	43004-35	18" RIM BLACK OR RAW REAR ONLY WL, WLA	$150.00
3940-35C	43004-35C	18" RIM CHROME REAR ONLY WL, WLA	$150.00
3940-40	43006-40	16" RIM BLACK REAR ONLY WL, WLA	$125.00
3940-40C	43006-40C	16" RIM CHROME REAR ONLY WL, WLA	$125.00
3940-40A	43008-40A	16" RIM BLACK FRONT ONLY WL, WLA	$150.00
3940-40AC	43008-40AC	16" RIM CHROME FRONT ONLY WL, WLA	$150.00
3941-30	43002-30	18" RIM BLACK FRONT ONLY WL. WLA	$150.00
3941-30C	43003-30	18" RIM CHROME FRONT ONLY WL, WLA	$150.00
3945-30A/PK	43029-30/PK	COMPLETE SET OF 18" SPOKES & NIPPLES PARK FRONT WL, WLA	$120.00
3945-30A/CD	43029-30/CD	COMPLETE SET OF 18" SPOKES & NIPPLES CAD FRONT WL, WLA	$120.00
3945-30A/STN	43029-30/STN	COMPLETE SET OF 18" SPOKES & NIPPLES STAINLS FRONT WL, WLA	$130.00
3943-36A/PK	43030-36/PK	COMPLETE SET OF 18" SPOKES & NIPPLES PARK REAR WL. WLA	$120.00
3943-36A/CD	43030-36/CD	COMPLETE SET OF 18" SPOKES & NIPPLES CAD REAR WL. WLA	$120.00
3943-36A/STN	43030-36/STN	COMPLETE SET OF 18" SPOKES & NIPPLES STAINLS REAR WL. WLA	$130.00
3945-40A/PK	43036-40/PK	COMPLETE SET OF 16" SPOKES & NIPPLES PARK FRONT WL, WLA	$120.00
3945-40A/CD	43036-40/CD	COMPLETE SET OF 16" SPOKES & NIPPLES CAD FRONT WL, WLA	$120.00
3945-40A/STN	43026-40/STN	COMPLETE SET OF 16" SPOKES & NIPPLES STAINLS FRONT WL, WLA	$130.00
3943-40A/PK	43032-40/PK	COMPLETE SET OF 16" SPOKES & NIPPLES PARK REAR WL. WLA	$120.00
3943-40A/CD	43032-40/CD	COMPLETE SET OF 16" SPOKES & NIPPLES CAD REAR WL. WLA	$120.00
3943-40A/STN	43032-40/STN	COMPLETE SET OF 16" SPOKES & NIPPLES STAINLS REAR WL. WLA	$130.00
FRONT WHEEL	WL & WLA		
3906-30/OD	43599-30/OD	FRONT WHEEL BRAKE SHELL COMPLETE OD GREEN	$450.00
3906-30/BK	43599-30/BK	FRONT WHEEL BRAKE SHELL COMPLETE BLACK	$450.00
0344/PK	9851/PK	GREASE FITTING PARK	$2.50
0344/CD	9851/CD	GREASE FITTING CAD	$2.50
3912-43	43638-43	FRONT WHEEL HUB GREASE DISTRIBUTOR	$22.00
3923-30	43624-30	FRONT WHEEL HUB ADJUSTING CONE	$27.00
3926-30	43635-30	HUB BEARING CONE LOCK WASHER	$6.00
3928-44	43632-44	HUB BEARING CONE OIL SEAL	$6.00
3924-44A	43633-44	HUB BEARING CONE OIL SEAL RETAINER	$12.00
3929-30	43885-30	HUB BEARING CONE LOCK NUT	$12.00
3923-30	43640-30	LEFT INNER DIRT GUARD	N/A
3935-30	43645-30	SPOKE FLANGE RIGHT SIDE	N/A
0308	8523	RIVETS FOR BRAKE SHELL AND SPOKE FLANGE	N/A
0282	8830	BALL BEARING (26-REQ)	$0.15
3921-30	43217-30	FRONT WHEEL AXLE SLEEVE	$175.00
3925-30	43630-30	FRONT WHEEL HUB BEARING CONE SPRING (2-REQ)	$6.00
3932-30	43635-30	FRONT WHEEL HUB CONE LOCK WASHER	$8.00
0292	0292	COTTER PIN (2-REQ)	$0.16
3910-37	7811	FRONT AXLE NUT (2-REQ)	$3.26
3910-30	43871-30	FRONT WHEELE AXLE	$27.00

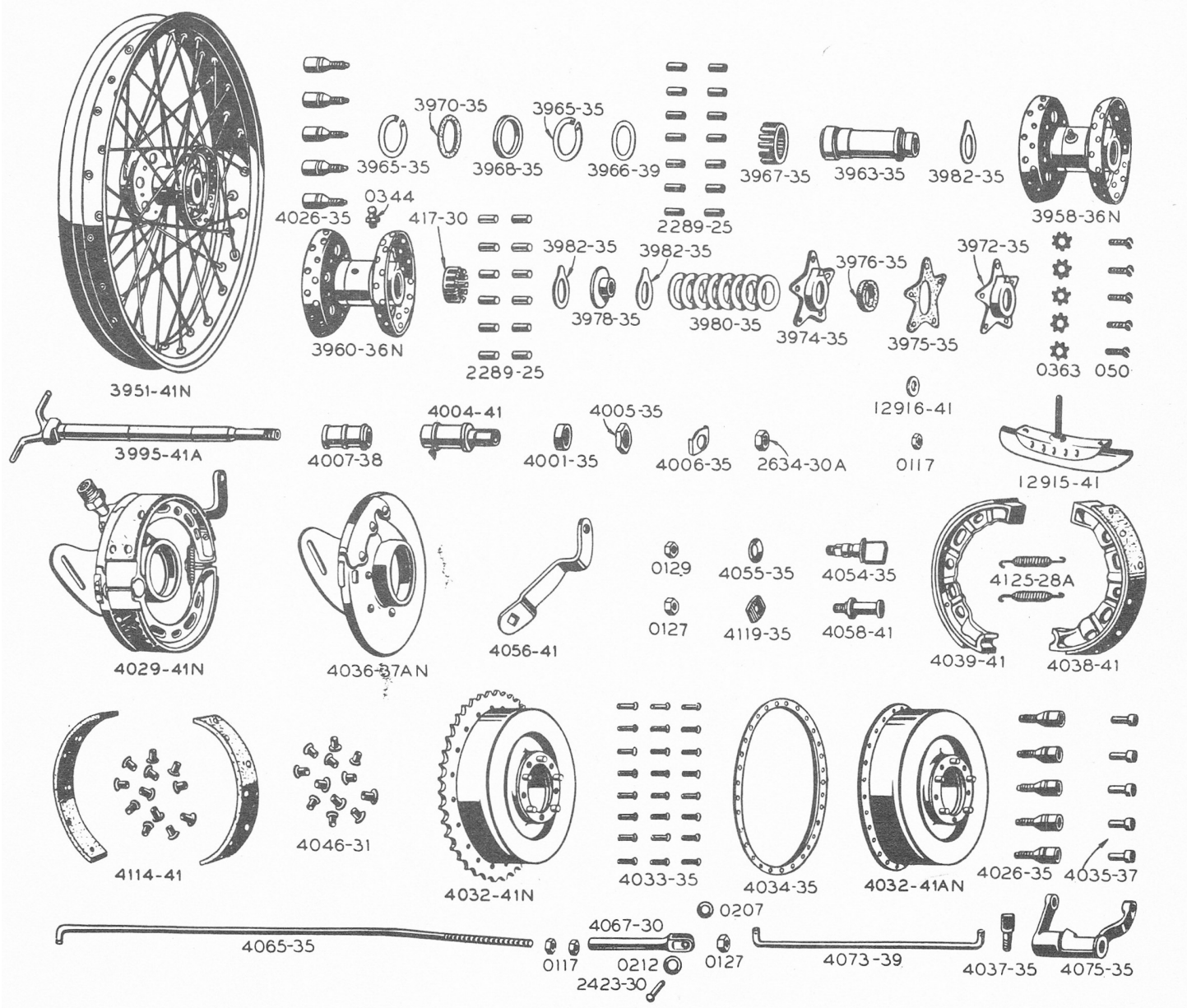

REAR WHEEL			
3958-36N	43540-36	COMPLETE HUB BLACK	$250.00
3963-35	43550-35	ROLLER BEARING SLEEVE	$37.00
3965-35	43554-35	BEARING RETAINING LOCK RING	$2.45
3966-39	43558-39	ROLLER BEARING THRUST WASHER	$2.40
3967-35	43578-35	ROLLER BEARING RETAINER LARGE	$11.00
2289-25	9220	ROLLER STANDARD	$0.50
	9221	ROLLER +.0002	$0.50
	9222	ROLLER +.0004	$0.50
	9223	ROLLER +.0006	$0.50
	9224	ROLLER +.0008	$0.50
	9225	ROLLER +.001	$0.50
	9226	ROLLER +.002	$0.50
3968-35	43571-35	CORK WASHER LARGE	$1.30
3972-35	43566-35	OUTER BEARING COVER	$16.00
050	2762	OULER COVER SCREWS	$1.40
0363	7230	OUTER COVER SCREW LOCK WASHERS	$0.24
3974-35	43574-35	INNER THRUST BEARING COVER	$12.00

3975-35	43576-35	STAR GASKET	$1.40
3976-35	43570-35	CORK WASHER SMALL	$3.00
3978-35	43556-35	HUB THRUST SLEEVE	$24.00
3980-35	43560-35	ADJUSTING SHIM WASHERS .002	$0.50
3980-35A	43560-35A	ADJUSTING SHIM WASHERS .007	$0.50
3982-35	43563-35	THRUST WASHER THICK	$3.58
417-30	24721-30	ROLLER RETAINER SMALL	$22.95
4026-35	43530-35	WHEEL MOUNTING LUG NUTS	$6.00
4026-35S	43531-35	WHEEL MOUNTING LUG NUTS OVERSIZE	$6.00
REAR AXLE			
3995-41A	41551-41	REAR AXLE ALL 41-52	$42.00
2634-30A	7905	REAR AXLE NUT	$1.66
4001-35	41598-35	REAR AXLE SPACER	$5.95
4006-35	41603-35	REAR AXLE NUT LOCK WASHER	$6.54
4004-41	41718-41	AXLE SLEEVE	$18.00
4005-35	8056	AXLE SLEEVE NUT	$7.00
4007-38	41593-38	AXLE SPACER LEFT OR RIGHT	$18.00
REAR WHEEL	BRAKE PARTS		
4029-41	41674-41	REAR BRAKE ASSEMBLY less drum	$385.00
4032-41	41401-41	BRAKE SHELL AND SPROCKET	$175.00
4033-35	4033-35	REAR WHEEL DRIVE SPROCKET RIVETS	$12.00
4034-35	41421-35	SPLASH RING	$8.00
4035-37	41425-37	BRAKE SHELL PIN	$1.50
4036-37	41650-37	BRAKE BACKING PLATE	$175.00
4038/39-41	41801-41	REAR BRAKE SHOE SET	$90.00
4046-31	41841-31	BRAKE SHOE RIVETS	$0.35
4114-41	41849-41	SET OF BRAKE LININGS & RIVETS	$17.50
4125-28A	44486-28	BRAKE SHOE SPRINGS	$3.60
4054-35	41670-35	BRAKE OPERATING SHAFT	$40.00
0129	7789	SHAFT NUT	$1.32
4055-35	41690-35	OPERATING SHAFT SPRING WASHER	$6.00
4056-41	41925-41	BRAKE LEVER	$24.00
4058-41	41876-41	BRAKE SHOE PIVOT STUD	$26.00
4119-35	44476-35	PIVOT STUD PLATE	$11.95
0127	7793	STUD NUT	$1.32
4065-35	42258-35	REAR BRAKE ROD	$29.95
0117	7752	BRAKE ROD NUT	$1.10
4067-30	42273-30	REAR BRAKE ROD CLEVIS	$21.99
2423-30	42269-30	BRAKE ROD CLEVIS PIN	$1.25
0207	6220	CLEVIS PIN WASHER	$0.34
0212	6310	REAR BRAKE ROD WASHER	$0.34
4037-35	41716-35	BRAKE ARM ANCHOR STUD	$7.90
4073-39	42330-39	FOOT PEDAL BRAKE ROD	$27.95
4075-35	42566-35	BRAKE CROSSOVER SHAFT	$65.00

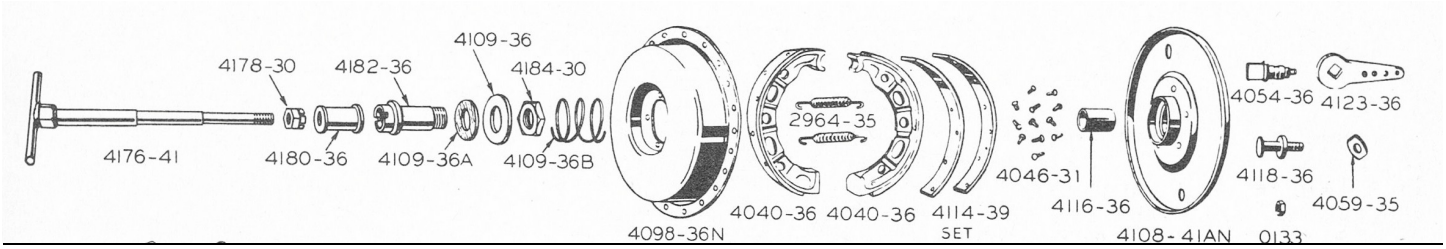

FRONT BRAKE	PARTS WLC & BIG TWIN		
4098-36	44113-36	FRONT BRAKE DRUM	$100.00
4108-41	44145-41	FRONT BRAKE BACKING PLATE	$125.00
4182-36	43882-36	AXLE SLEEVE BRAKE SIDE	$32.95
4184-30	43886-30	AXLE SLEEVE NUT	$6.35
4109-36	44182-36	BRAKE HUB WASHER	$6.00
4109-36A	44182-36	BRAKE HUB CORK SEAL	$4.00
4109-36B	44186-36	BRAKE HUB SPRING	$6.00
KIT		BRAKE HUB WASHER CORK AND SPRING	$14.00
4040-36	44402-36	SET OF BRAKE SHOES COMPLETE	$133.00
4046-31	41841-31	BRAKE LINING RIVETS	$8.00
4114-39	44433-39	SET OF LININGS AND RIVETS	$20.00
4116-36	44108-36	SIDE COVER BUSHING	$12.00
4118-36	44449-36	PIVOT STUD	$23.55
4059-35	44475-35	PIVOT STUD PLATE	$13.95
0133	0113	STUD NUT	$1.10
4123-36	44308-36	OPERATING LEVER	$31.00
4054-36	44265-36	OPERATING STUD	$39.95
4124-36A	44270-36	OPERATING STUD WASHER	$5.00
0129	7789	STUD NUT	$1.32
2964-35	44484-35	BRAKE SHOE SPRING	$10.00
WL/WLA			
4112-40	44402-40	SET OF BRAKE SHOES AND LININGS WL	$125.00
4114-35	44427-35	SET OF LININGS AND RIVETS	$28.00
4125-28A	44486-28	FRONT BRAKE SHOE SPRINGS (2-REQ) WL	$14.00
4116-30	44180-30	FRONT SIDE COVER BUSHING	$9.00
4117-30	44340-30	STABILIFER CENTER PLATE	$14.00
4140-29	44250-29	STABILIFER CENTER PLATE NIPPLE EXTENSION	$5.00
0344	9851	GREASE FITTING	$2.50
4118-29	44348-29	STABILIZER SPRING WASHER	$5.00
4119-29	44344-29	STABILIZER INNER WASHER	$6.00
4120-29	44346-29	STABILZER OUTER WASHER	$6.00
4121-29	45105-39	STABILIZER COVER	$7.00
4122-30	44350-30	STABILIZER COLLAR STUD (2-REQ)	$14.00
0104	7620	STUD NUT (2-REQ)	$0.33
4118-35	44450-35	BRAKE SHOE PIVOT STUD	$22.00
4119-35	44476-35	PIVOT STUD PLATE	$8.00
0133	7835	PIVOT STUD NUT	$1.42
4123-31	44207-31	BRAKE OPERATING LEVER	$20.00
4124-31	44265-31	BRAKE OPERATING STUD	$20.00
4125-38A	44231-38	BRAKE OPERATING STUD NIPPLE EXTENSION	$18.00
0345	9852	STUD GREASE NIPPLE	$4.00
4131-28	44223-28	BRAKE STUD BUSHING	$7.00

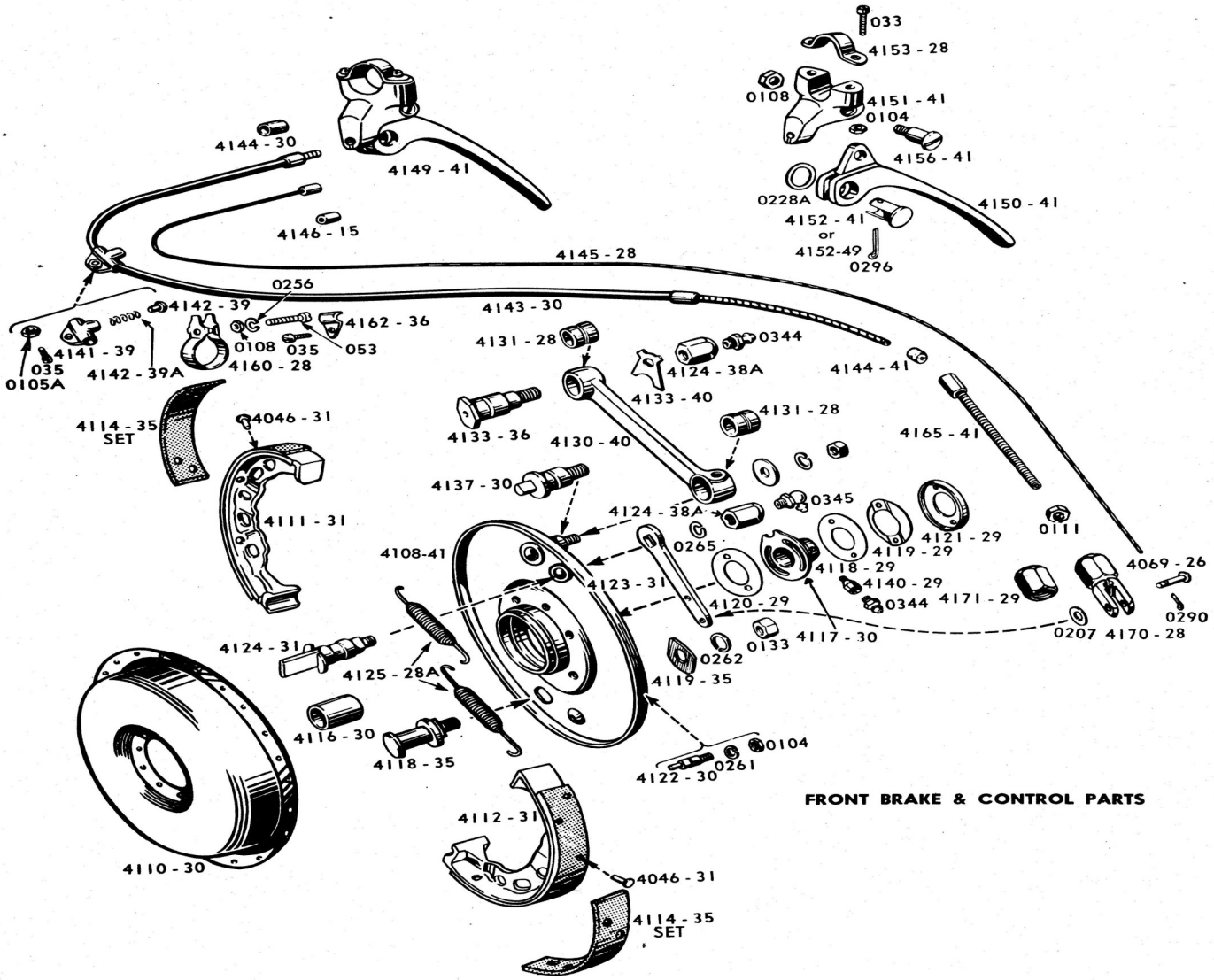

4133-36	44226-36	FRONT BRAKE SHACKLE FORK STUD	$14.00
4133-40	44229-40	SHACKLE STUD LOCK WASHER	$5.00
4137-30	44225-30	BRAKE SHACKLE SIDE COVER STUD	$20.00
4124-38A	44231-38	FRONT BRAKE SHAKLE NUT	$18.00
0128	7809	STUD NUT	$1.90
0225	6400	STUD WASHER	$0.44
0223	6408	FORK STUD WASHER	$0.96
4130-39	4130-39	BRAKE CABLE OIL CUP KIT	$14.00
4143-30/KT	45085-30/KT	FRONT BRAKE CABLE ASSEMBLY COTTON BRAID W/OILER	$45.00
4143-30/CR	45085-30/CR	FRONT BRAKE CABLE ASSEMBLY COTTON BRAID WO/OILER	$40.00
4143-30R	45085-30/R	FRONT BRAKE CABLE ASSEMBLY VINYL BRAID WO/OILER	$20.00
4149-41	45002-41/E	HAND LEVER CAST METAL--painted	$125.00
4149-41/AL	45002-41/AL	HAND LEVER CAST ALUMINUM POLISHED	$38.00
4149-41/CH	45002-41/CH	HAND LEVER CAST ALUMINUM CHROME	$38.00
4160-28/KIT	9980	HANDLEBAR CLIP W/SCREW, LOCK AND NUT	$18.00
053	2775	BOLT	$1.50
0108	7691	NUT	$0.96
4162-30	9967	COIL CLIP	$6.00
4162-36	9968	COIL CLIP TO FORK	$6.00
4163-40	9974	CONTROL COIL CLAMP	$12.00
4165-28	38674-28	CONTROL COIL ADJUSTING SLEEVE	$14.00
4166-28	7827	ADJUSTING SLEEVE NUT	$5.00
4165-41	45162-41	ADJUSTING SLEEVE SCREW	$12.00
0111	7748	NUT	$1.04
4170-28	45172-28	CONTROL WIRE LOWER CONNECTION	$24.00
4171-29	45182-29	LOWER CONNECTION CLAMP NUT	$8.00
4069-26	496	CLEVIS PIN	$5.00
0207	6220	CLEVIS PIN WASHER	$1.00

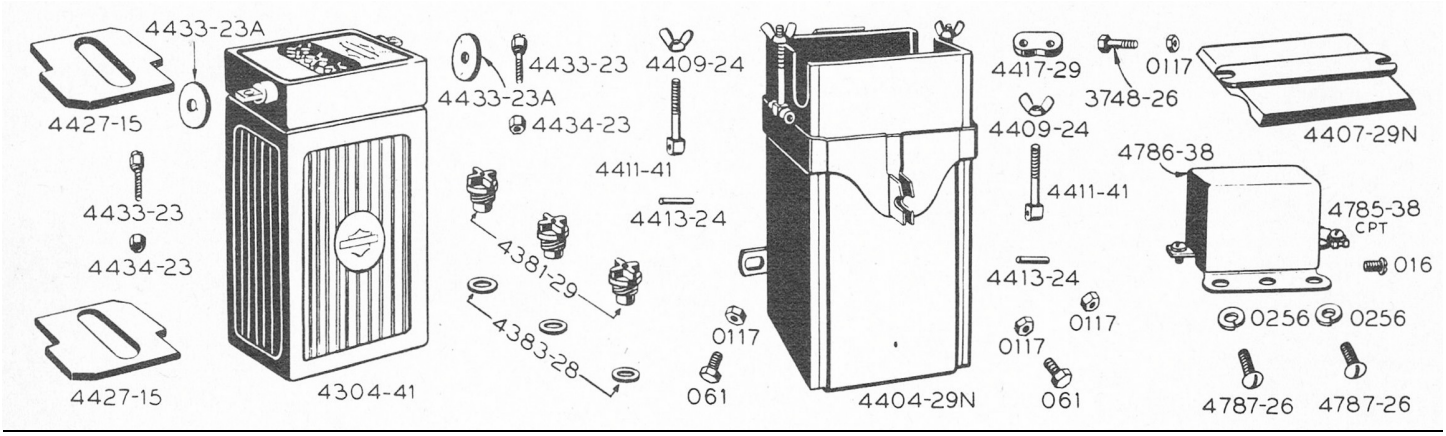

BATTERIES &	ELECTRICAL		
4304-41	66006-29	BATTERY	$80.00
4404-29	66206-29	BATTERY CASE box with lid	$110.00
4407-29	66377-29	BATTERY COVER	$24.00
4409-24/PF	66387-24	BATTERY WING NUT PARK (2-REQ) 1.00 ea.	$2.00
4409-24/CD	66387-24	BATTERY WING NUT CAD (2-REQ) 1.00 ea.	$2.00
4411-41	66387-41	COVER CLAMP BOLT	$6.00
4413-24	66288-24	CLAMP BOLT LOCK PIN (2-REQ)	$3.00
066	4000	FRONT BOLT	$2.00
3748-29	4013	REAR UPPER BOLT (2-REQ) $8.00 ea.	$16.00
061	3953	REAR LOWER BOLT (2-REQ) $1.50 ea.	$3.00
0117	7752	BATTERY BOLT NUT (4-REQ) $1.00 ea.	$4.00
4427-15	66100-15	BATTERY MAT set of 2	$9.00
4433-23	66112-23	TERMINAL SCREW (2-REQ) $3.00 ea.	$6.00
4433-23A	66115-23	TERMINAL FELT (2-REQ)	$3.00
4434-23	7628	TERMINAL SCREW NUT (2-REQ)	$3.00
KIT	7615-4	BATTERY TERMINAL SCREW KIT	$13.50
4785-38/REP	74750-38/REP	REPLICA DELCO RELAY	$90.00
4785-38/EL	74750-38/EL	ELECTRONIC RELAY	$95.00
4786-38	74755-38	RELAY COVER	$25.00
4787-26	2763W	RELAY MOUNTING AND BRACKET SCREW	$3.00
0108	7691	RELAY MOUNTING NUT	$1.00
016	2582	CONTACT BLADE SCREW	$0.25
020	1052	TERMINAL WIRE SCREW	$0.50
INSTRUMENT	PANEL & SWITCH		
4505-39	70950-39	INSTRUMENT PANEL BASE BARE	$150.00
4506-36	71065-36	MOUNTING BASE STUD (3-REQ) $3.00 ea.	$9.00
0108	7691	PANEL BASE NUT-set of 3	$4.00
KIT	7715-6	DASH PLATE MOUNTING KIT	$20.00
4927-15	68165-15	PANEL LAMP BULB-set of 3	$6.00
4508-36	71093-36	CENTER BULB CONTACT SPRING	N/A
4508-38	71093-38	SIDE BULB CONTACT SPRING (2-REQ)	N/A
4509-38	71095-38	SIDE BULB SOCKET (2-REQ)	N/A
4509-38A	71097-38	BULB SOCKET INSULATOR (2-REQ)	N/A
013	3420	BULB SOCKET SCREW	N/A
0101	7590	SOCKET SCREW NUT	N/A
0103	7608	SOCKET SCREW NUT (2-REQ) .50 ea.	$1.00

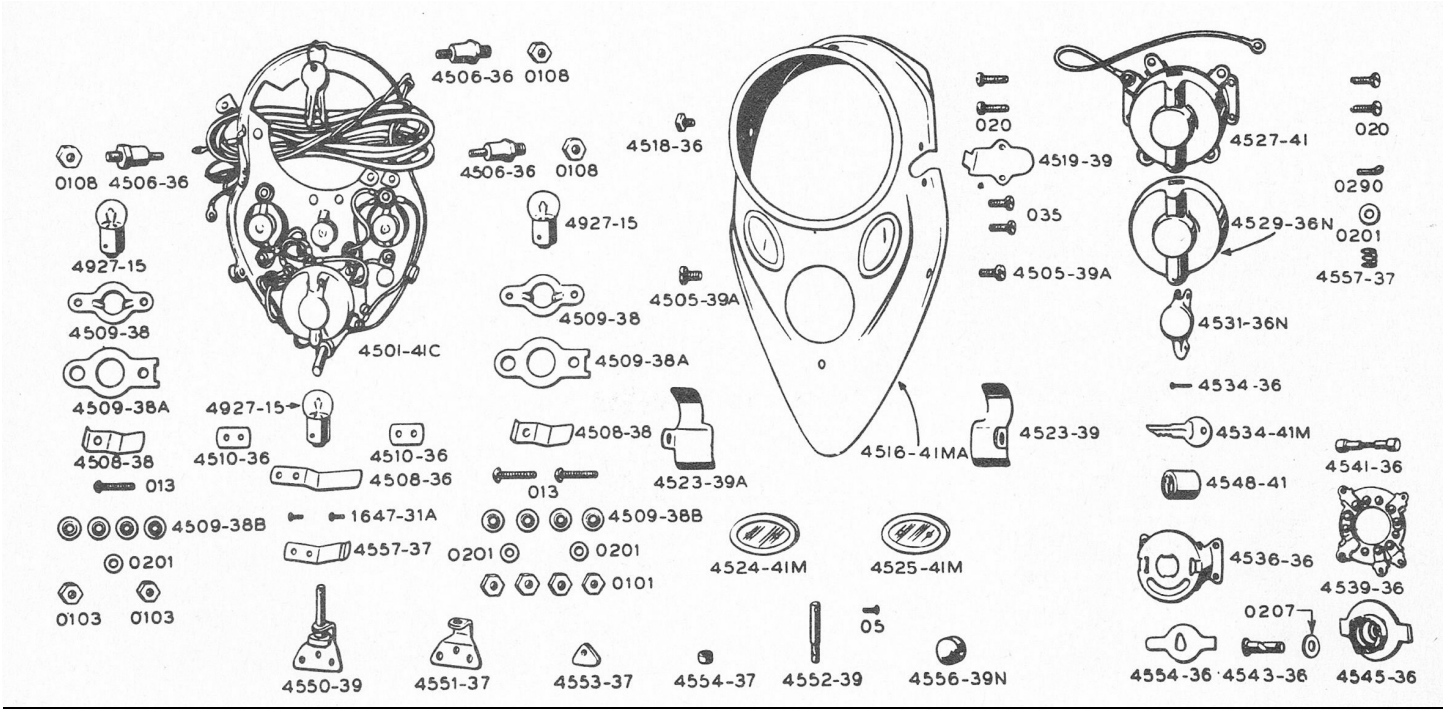

0201	6182	3/16" THIN STEEL WASHER (8-REQ)	$0.12
4509-38B	71098-38	SCREW INSULATOR (9-REQ)	$1.75
4510-36	71180-36	CENTER CONTACT SPRING INSULATOR (2-REQ)	N/A
1647-31A	8314	CONTACT SPRING TUBULAR BRASS RIVET	N/A
KIT	2714-36	INSTRUMENT PANEL BASE RESTORATION KIT	$45.00
4516-39/41	71270-39	INSTRUMENT PANEL COVER painted	$165.00
4518-36	3550	PANEL COVER SCREW	$4.00
4505-39A	2658	SIDE PANEL COVER SCREW (2-REQ)	$6.00
4519-39	71311-39	SIDE COVER PLATE	$4.00
035	1190	SIDE COVER PLATE SCREWS	$0.50
4523-39	71325-39	PANEL LIGHT SHIELD R.H.	$9.00
4523-39A	71326-39	PANEL LIGHT SHIELD L.H.	$9.00
KIT	2671-2	INSTRUMENT PANEL LIGHT SHIELD KIT FITS 1939-1946 ALL	$16.00
4524/25-41M	4524/25-41M	DASH FRAME AND WINDOW KIT PARK BLACKOUT	$60.00
4524/25-39/PK	4524/25-39/PK	DASH FRAME AND WINDOW KIT PARK	$61.00
4524/25-39/NC	4524/25-39/NC	DASH FRAME AND WINDOW KIT NICKLE PLATE	$62.00
4527-41/44	4527-41/44	IGNITION SWITCH MILITARY	Call
4527-36	71500-36	IGNITION SWITCH CIVILIAN 5 pole	$38.00
4529-41MA	4529-41MA	SWITCH COVER MILITARY	N/A
4529-36A	71506-36	SWITCH COVER CIVILIAN	$12.00
4531-36/4534-36	71510-36	SWITCH KEY HOLE CIVER AND RIVET	$9.00
4560-39	71589-39	IGNITION SWITCH SPACERS	$1.16
4560-41MA	4560-41M	IGNITION SWITCH SPACER SCREWS	$1.00
KIT	2618-12	IGNITION SWITCH MOUNTING SPACER KIT	$8.00
010	993	TERMINAL CONTACT SCREW	$0.39
4550-39	71600-39	PANEL LIGHT SWITCH	$30.00
4556-39	2563-2	PANEL SWITCH KNOB AND SCREW KIT 1939-1943 PARK	$9.20
4556-42	2561-62	PANEL SWITCH KNOB AND SCREW KIT 1944-1946 PARK	$9.20
05	2540	SWITCH KNOB SCREW	$4.00

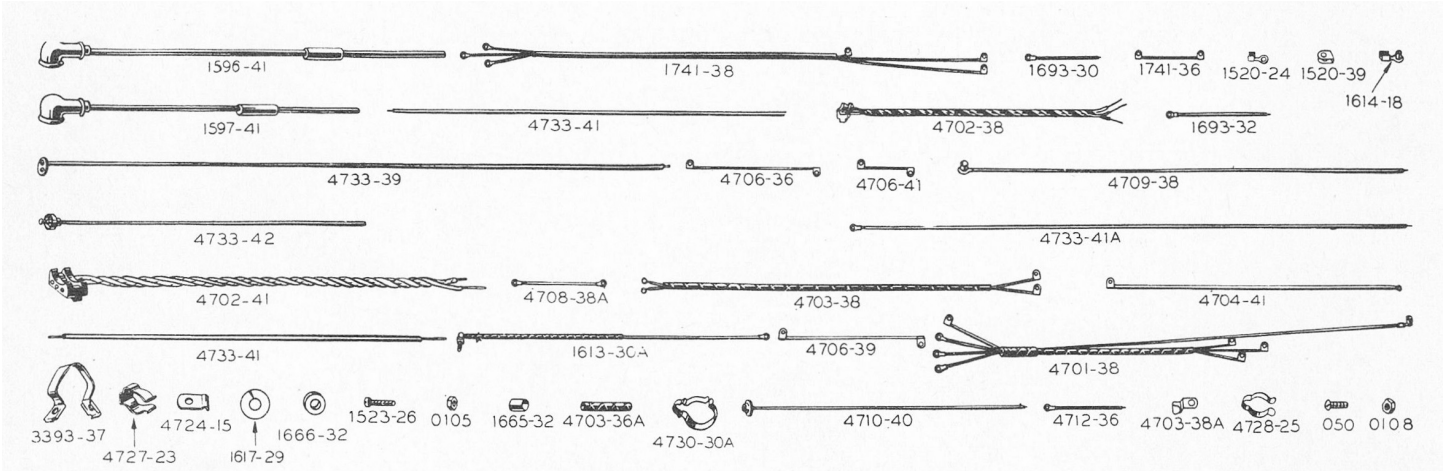

WIRING			
4736-42M	4736-42M	COMPLETE WIRE HARNESS WLA	$85.00
4735-38A	4735-38A	COMPLETE WIRE HARNESS 1938-1946 CIVILIAN	$85.00
1593/1597-41	31966-36	1930-1960 SPARK PLUG WIRE SET, 2 PIECES	$17.00
1613-30		CIRCUIT BREAKER TO COIL WIRE	$11.00
KIT	2542-10	CIRCUIT BREAKER TO COIL WIRE ASSEMBLY	$20.95
0105	7630	TERMINAL WIRE NUT	$.50
1665-32	30463-32	TERMINAL SCREW INSULATOR	N/A
1666-32	6186	TERMINAL SCREW BAKELITE WASHER	$1.50
1617-29	6285	FIBER INSULATING WASHER	N/A
4503-38A	4503-38A	HORN WITE CLAMP	N/A
4728-25	9976	WIRE CLAMP 1 - 1/4"	$8.00
4730-30A	9977	WIRE RETAINING CLAMP FRAME HEAD	$14.00
3393-37	56628-37	SPARK CABLE TO FRAME CLAMP	$12.00
4524-15	4524-15	FRONT MARKER LIGHT WIRE CLIP	$12.00
050	2656	FRONT MARKER LIGHT WIRE CLIP SCREW	$1.50
0108	7691	FRONT MARKER LIGHT WIRE CLIP SCREW NUT	$1.00

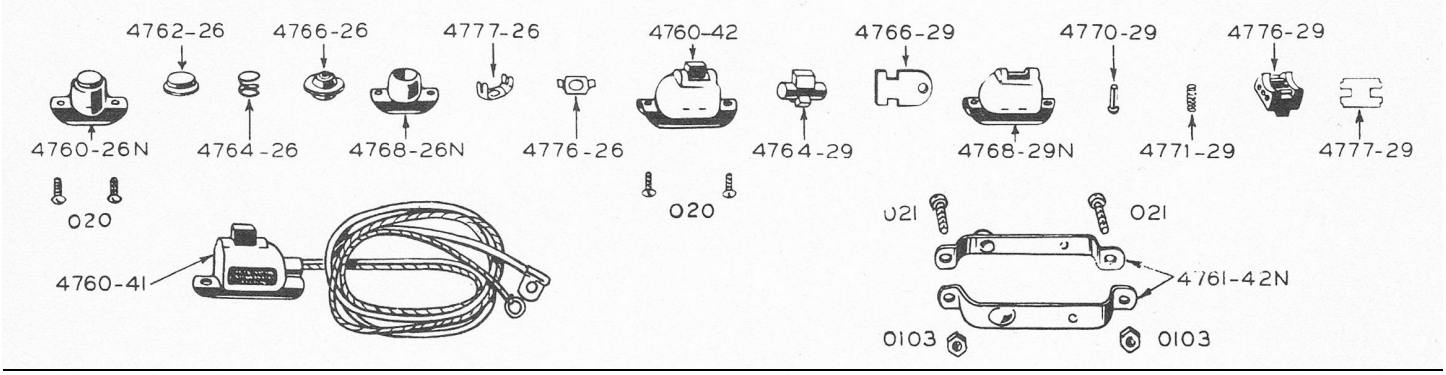

HANBLEBAR	SWITCHES		
4760-29	71800-26	HORN SWITCH WITH WIRE	$28.00
4760-42/26	71840-29	DIMMER SWITCH WITH WIRE	$28.00
020	1052	SWITCH MOUNTING SCREW WLC	$0.46
018	2626W	SWITCH MOUNTING SCREW WLA WL	$1.00
4760-41	4760-41	AUXILIARY SWITCH	N/A
4716-42N	4716-42N	AUXILIARY SWITCH CLAMPS	N/A
021	1062	AUXILIARY SWITCH MOUNTING SCREWS	$.50
0103	7608	AUXILIARY SWITCH MOUNTING SCREWS NUTS	$.50
4762-26	71802-26	HORN BUTTON	$6.00

4764-26	71804-26	HORN SWITCH BUTTON SPRING	$5.00
4762-29	71802-26	LICHT SWITCH LEVER	N/A
4766-26	71806-26	HORN SWITCH WIRE INSULATION	$6.00
4766-29	71848-29	LIGHT SWITCH WIRE INSULATION	$6.00
4770-29	71859-26	LIGHT SWITCH CONTACT PIN	N/A
4771-29	71861-29	LIGHT SWITCH CONTACT PIN SPRING	N/A
4776-26	71813-26	HORN SWITCH CONTACT PLATE	N/A
4776-29	71851-29	LIGHT SWITCH CONTACT BLOCK	N/A
4777-26	71815-26	HORN SWITCH SPRING STOP WASHER	N/A
4777-29	71856-29	LIGHT SWITCH RETAINER PLATE	N/A

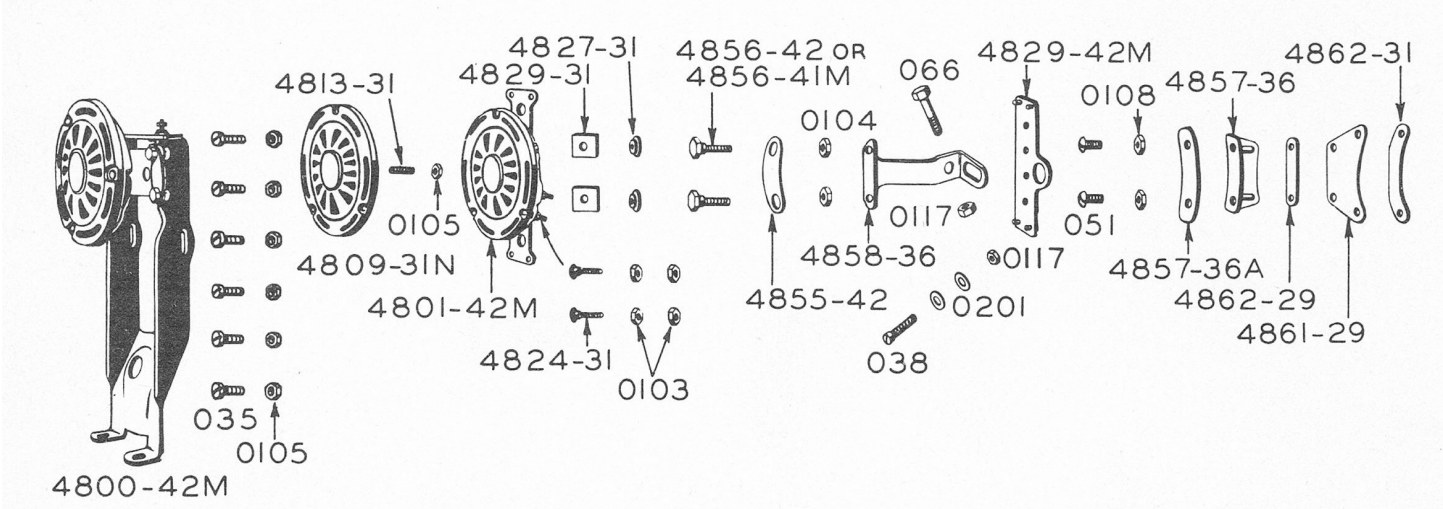

HORN	MILITARY		
4800-42M/4966-42M	4800-42M/4966-42M	HORN BRACKET used	$185.00
4801-42AM	4801-42AM	HORN ONLY	$250.00
4809-31N	4809-31N	HORN FRONT	$40.00
035	1190	PROJECTOR COLLAR SCREW	$0.50
0105	7634	PROJECTOR SCREW NUT	$0.48
0103	7608	TERMINAL NUT	$0.29
4827-31	69032-31	TERMINAL SCREW BUSHING	N/A
4829-31	69034-31	TERMINAL SQUARE FIBER	N/A
4829-42M	2789-15	HORN TERMINAL PLATE KIT	$11.00
038	1218	TERMINAL PLATE SCREW	$0.50
0201	6182	TERMINAL PLATE SCREW WASHER	$0.12
0105A	7638	TERMINAL PLATE SCREW NUT	$0.33
4855-42	69118-42	HORN BRACKET SPRING PLATE	$6.00
4856-42	69107-42	HORN BRACKET SPRING PLATE BOLT	$6.00
4856-42M	69108-42	HORN MOUNTING BOLT	$6.00
037	1210	HORN MOUNTING SCREW	$0.50
0104	7620	HORN BRACKET PLATE BOLT NUT	$0.33
4857-36	69120-36	HORN BRACKET LOWER	$8.00
4857-36A	69124-36	HORN BRACKET REINFORCEMENT	$4.40
051	2762	BRACKET BOLT	$1.40
0108	7691	BRACKET BOLT NUT	$0.96
4858-36	69130-36	UPPER HORN BRACKET	$4.00
066	4000	UPPER BRACKET TO FORK BOLT	$2.10
0117	7752	BRACKET BOLT NUT	$1.10
4861-29	76043-29	HORN BRACKET SPRING	$6.00
4862-29	69042-29	STRAIGHT SPRING PLATE	$6.00
4862-31	69041-31	CURVED SPRING PLATE	$6.00
KIT	HORN MOUNT	HORN MOUNT KIT 1942-1945 ALL	$16.00

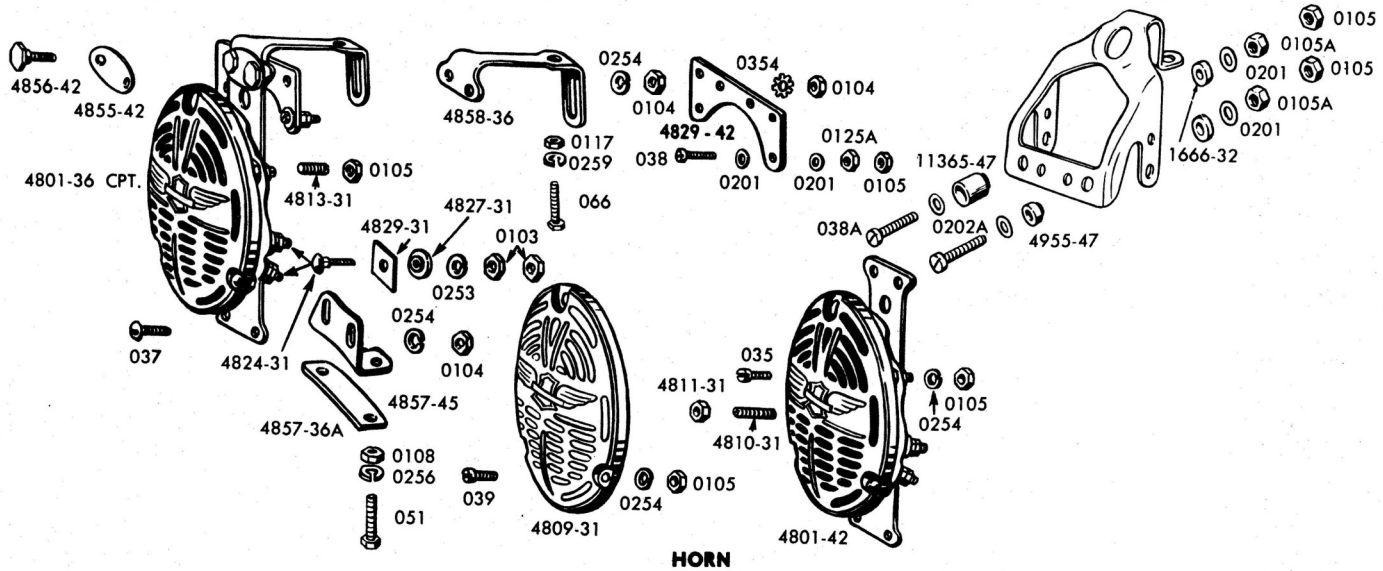

HORN

HORN	CIVILIAN		
4801-42	69001-42	HORN COMPLETE WITH CHROME FACE	$230.00
4809-31	69020-31	CHROME HORN FACE	$69.00
035	1190	PROJECTOR COLLAR SCREW SHORT	$0.50
039	1229	PROJECTOR COLLAR SCREW LONG	$0.56
0105	7634	COLLAR SCREW NUT	$0.48
4811-31	69024-31	DIAPHRAGM SCREW NUT	N/A
4813-31	69038-31	ADJUSTING SCREW	N/A
0105	7634	ADJUSTING SCREW NUT	$0.48
4824-31	69030-31	TERMINAL SCREW	N/A
0103	7608	TERMINAL SCREW NUT	$0.29
4827-31	69032-31	TERMINAL SCREW BUSHING	N/A
4829-31	69034-31	TERMINAL SCREW FIBER	N/A
4829-42	69037-42	HORN TERMINAL PLATE	$14.00
038	1218	HORN TERMINAL PLATE SCREW	$0.50
0201	6182	HORN TERMINAL PLATE SCREW WASHER	$0.12
0105A	7634	HORN TERMINAL PLATE SCREW NUT	$0.33
KIT	2819-8	HORN TERMINAL BOARD KIT FITS 1942-1946 CIVILIAN MODELS	$19.00
4855-42	69118-42	HORN BRACKET SPRING PLATE	$6.00
4856-42	69107-42	HORN BRACKET SPRING PLATE BOLT set of 2	$12.00
0104	7620	HORN BRACKET PLATE BOLT NUT	$0.33
0354	7220	BRACKET BOLT SHAKEPROOF WASHER	$0.29
4857-36	69120-36	HORN BRACKET LOWER	$8.00
4857-45	69102-45	LOWER HORN BRACKET	$12.00
4857-36A	69124-36	HORN BRACKET REINFORCEMENT	$4.40
051	2762	BRACKET BOLT	$1.40
0108	7691	BRACKET BOLT NUT	$0.96
4858-36	69130-36	UPPER HORN BRACKET	$55.00
066	4000	UPPER BRACKET TO FORK BOLT	$2.10
0117	7752	BRACKET BOLT NUT	$1.10
037	1210	HORN TO BRACKET SCREW	$0.50
4966-36	67108-36	UPPER HORN BRACKET	$54.95
038A	1222	UPPER HORN BRACKET BOLT	$0.50
4955-47	6201	HORN BRACKET INSULATOR	$7.00
1666-32	2184	UPPER HORN BRACKET BOLT INSULATING WASHER	N/A
11365-47	69135-47	HORN BRACKET BOLT INSULATOR	$5.55
4858-36A	69132-36	UPPER HORN CONNECTION	$17.00
4861-29	76043-29	HORN BRACKET SPRING	$8.00
4862-29	69042-29	STRAIGHT SPRING PLATE	$8.00
4862-31	69041-31	CURVED SPRING PLATE	$8.00
KIT	HORN MOUNT	HORN MOUNT KIT 1942-1945 ALL	$14.00
KIT	HORN MOUNT	HORN MOUNT KIT 1946-1948 ALL	$14.00

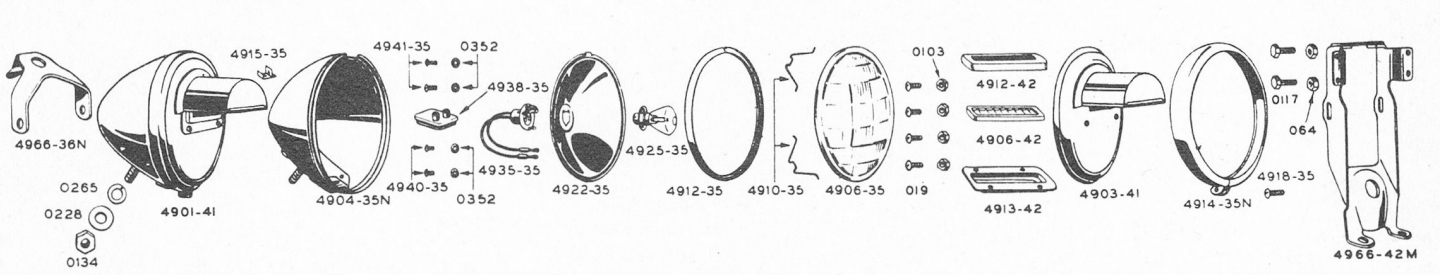

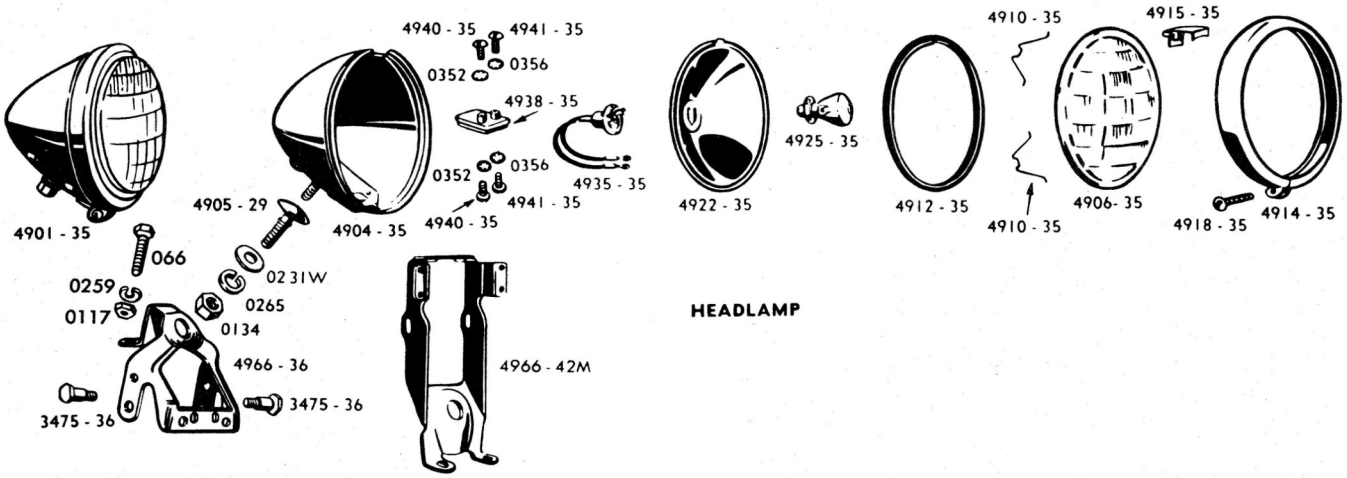

HEADLAMP

HEAD LAMPS			
4901-41	4901-41	BLACKOUT HEADLAMP	N/A
4901-35	67701-35	HEADLAMP CIVILIAN BLACK	$90.00
4901-35C	67702-35	HEADLAMP CIVILIAN CHROME	$90.00
4903-41	4903-41	HEADLAMP BLACKOUT MASK COMPLETE	N/A
4903-42	4903-42	BLACKOUT MASK ONLY	N/A
4904-35N	67710-35	HEADLAMP BODY	$125.00
4906-35	67731-35	FRONT LENS CIVILIAN	$20.00
4906-42	4906-42	BLACKOUT MASK LENS	N/A
4910-35	67733-35	HEADLAMP RETAINING RING	$5.00
4912-35	67734-35	LENS PACKING WASHER	N/A
4912-42	4912-42	BLACKOUT LENS GASKET	$8.00
4913-42	4913-42	BLACKOUT LENS PLATE	N/A
4914-35N	67713-35	HEADLAMP DOOR ONLY	$27.00
4915-35	67716-35	HEADLAMP DOOR LUG	$25.00
4918-35	67715-35	HEADLAMP DOOR SCREW	$1.00
019	2629	BLACKOUT PLATE SCREW	$.50
0103	7608	BLACKOUT PLATE SCREW NUT	$.50
4922-35	67741-35	REFLECTOR	N/A
4925-35	67750-35	HEADLAMP BULB DOUBLE CONTACT	$2.00
4935-35	67753-35	HEADLAMP BULB CONNECTOR AND WIRES	$25.00
4938-35	67758-35	TERMINAL BLOCK	N/A
4940-35	67750-35	TERMINAL SCREW 8-32	$1.50
4941-35	67751-35	TERMINAL SCREW 10-32	$1.50
4966-36N	67810-36	HEADLAMP BRACKET	$54.00
4966-42M	4966-42M	HEADLIGHT AND HORN BRACKET used	$185.00
064	3974	BRACKET LOWER END BOLT	$2.00
0117	7752	LOWER END NUT	$1.00
6033-30	4736	BRACKET TO HANDLEBAR BOLT	$8.00
0134	7839	HEADLAMP NUT	$1.50
0231W	7070	HEADLAMP BOLT WASHER	$9.00
0352	7115	TERMINAL SCREW LOCK WASHER	$.25
0356	7118	TERMINAL SCREW LOCK WASHER	$.25
3475-36	67817-36	LAMP BRACKET BOLT	N/A
066	4000	BRACKET TO HANDLEBAR BOLT	$2.00

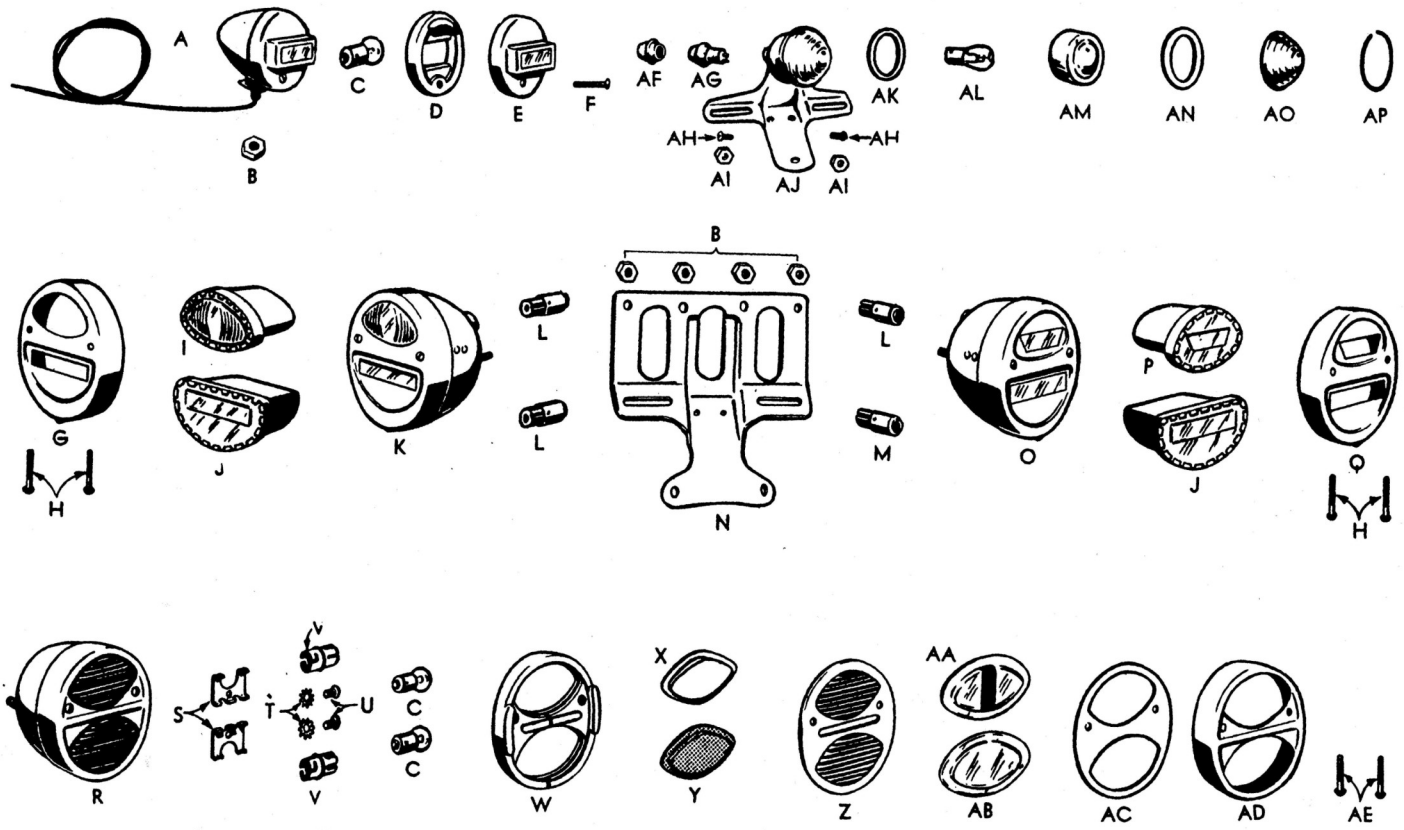

RA PD 335707

FIGURE 06-8—FRONT MARKER LIGHT AND TAIL AND STOP LIGHT

WLA TAIL TAMP	FRONT MARKER LAMPS		
A	4901-41M	LIGHT MARKER	$75.00
B	0117	NUT	$1.10
C	4926-15	LAMP	$3.00
D	4912-42M	PACKING	$4.00
E	4914-42M	DOOR	$15.00
F	4918-41M	SCREW	$2.00
G	5054-42MA	DOOR	$20.00
H	5056-42M	SCREW set of 2	$4.00
I	5077-42MB	LAMP UNIT	$15.00
J	5077-42M	LAMP UNIT	$15.00
K	5052-42M	LIGHT, TAIL AND STOP	$75.00
L	5064-41M	PLUG	$14.00
M	5078-42	PLUG	$14.00
N	5075-41M	BRACKET	$75.00
O	5052-41M	LIGHT	$75.00
P	5077-41MA	LAMP UNIT	$15.00
Q	5054-42M	DOOR	$20.00
R	5052-41M	LIGHT EARLY	N/A
S	5076-41M	RETAINER	N/A
T	0608	WASHER	N/A
U	021	SCREW	$0.46
V	5042-41M	SOCKET	$14.00
W	5070-41M	BLOCK	N/A
X	5068-41M	FILTER	N/A

Y	5066-41M	FILTER	N/A
Z	5064-41M	LOUVER	N/A
AA	5060-41M	LENS	N/A
AB	5062-41M	LENS	N/A
AC	5058-41M	GASKET	N/A
AD	5054-41M	DOOR	N/A
AE	5056-41M	SCREW set of 2	$4.00
AF	5062-34	CAP	N/A
AG	5061-34	PLUG	N/A
AH	0108	SCREW	$0.96
AI	051	NUT	$1.41
AJ	5051-34N	LIGHT ASSEMBLY	$375.00
AK	5067-36	GASKET	$4.00
AL	5058-34	LAMP	$5.00
AM	5065-25	WINDOW	$25.00
AN	5067-25	GASKET	$4.00
AO	5054-20	LENS	$25.00
AP	5056-20	RETAINER	$5.00

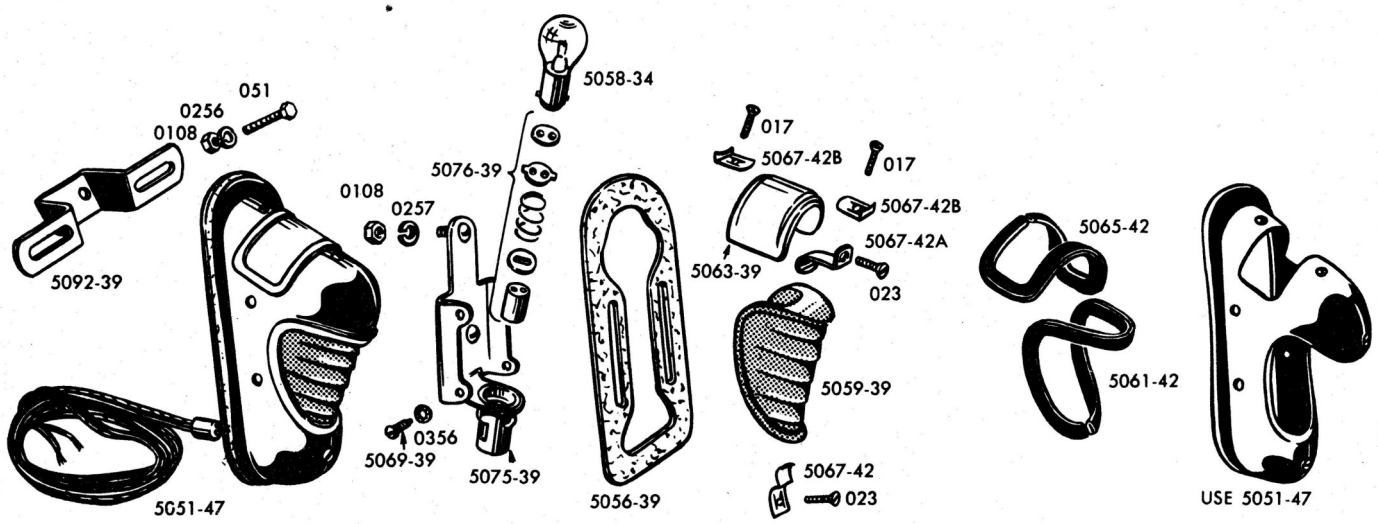

TAIL LAMPS
1939 TO 1946

1939-1946	TAIL LAMP		
5051-47	5051-39	TAILLAMP, BLACK STAMPED STEEL REPLICA FITS 1939-1946 ALL	$45.00
5051-47A	5051-39A	TAILLAMP, CHROME STAMPED STEEL REPLICA FITS 1939-1946 ALL	$45.00
5051-47/RES	4051-39/RES	BEEHIVE TAIL LAMP WITH LICENSE PLATE BRACKET	$375.00
5056-39	68124-39	TAIL LAMP BASE GASKET	$10.00
5058-34	68165-34	STOP LAMP BULB	$2.00
5059-39	68090-39	TAIL LAMP RED LENS GLASS	$35.00
5061-42	68120-42	RED LENS GASKET	$4.00
5063-39	68094-39	TAIL LAMP NUMPER PLATE WINDOW GLASS	$32.00
5065-42	68127-42	WINDOW GASKET	$4.00
1713	1713	RED LENS SCREW	N/A
5067-42	68112-42	RED LENS SPEED NUT LOWER	N/A
5067-42A	68113-42	RED LENS UPPER SPEED NUT	N/A
017	7752	LICENSE WINDOW SCREW	$1.10
5067-42B	68114-42	LICENSE WINDOW SPEED NUT	N/A
5069-39	68033-39	TAIL LAMP HOUSING SCREW	$7.00
0356	7118	HOUSING SCREW WASHER	$0.10
5075-39	68210-39	REAR LAMP BASE	N/A
5076-39	68188-39	SOCKET REPAIR KIT	$22.00
5092-39	72010-39	LICENSE BRACKET	$14.00
051	2762	BRACKET SCREW	$1.40
0108	7691	BRACKET SCREW NUT	$0.96

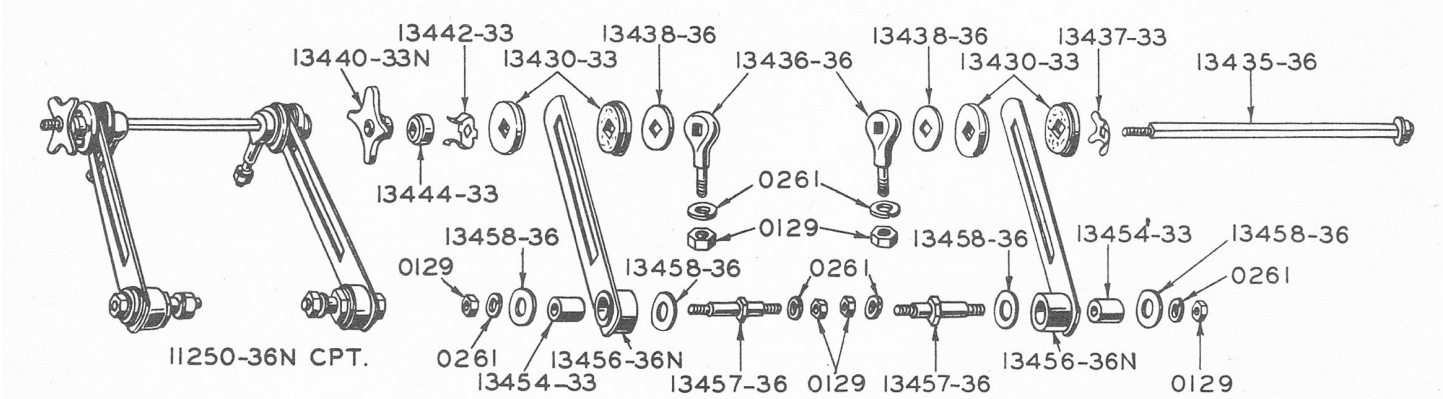

RIDE CONTROL			
11250-36	54000-36	RIDE CONTROL COMPLETE	$132.00
13430-33	54012-33	FRICTION DISC CUP SET OF 4	$23.00
13431-33	54014-33	FRICTION DISC SET OF 4	$20.00
13435-33	54020-36	SHAFT ADJUSTING ROD	$20.00
13436-36	54030-36	ROD AND BRACKET STUD	$18.00
0129	7789	BRACKET STUD NUT	$1.32
13437-33	54032-33	SPRING WASHER	$7.00
13438-36	54034-36	ROD PLAIN FRICTION WASHER	$8.00
13440-33	54040-33	ADRUSTING WHEEL	$16.00
13442-33	54041-33	ADJUSTING WHEEL SPRING CLIP	$7.00
13444-33	54049-33	ADJUSTING WHEEL COLLAR	$2.40
13454-33	54051-33	BUSHINGS	$8.00
13456-36	54061-36	SIDE PLATES	$80.00
13457-36	54063-36	SIDE PLATE STUD	$14.00
13457-40	6417	SIDE PLATE STUD WASHER	$8.00
13458-36	13458-36	PLATE STUD WASHER	$8.00
0261	7045	LOCK WASHER	$0.16
SAFETY GUARDS	& FITTINGS		
13020-35	49035-35	FRONT GUARD BLACK	$99.00
13020-35C	49036-35	FRONT GUARD CHROME	$110.00
13030-29	49150-29	REAR SAFETY GUARD BLACK	$150.00
13030-29C	49151-29	REAR SAFETY GUARD CHROME	$150.00
13051-X	49060-32	U BOLT FRONT GUARD	$10.00
0129	7789	U BOLT NUT	$1.32
2949-35	50653-35	RIGHT FRONT FOOTBOARD STUD	$11.00
13051-38	49177-38	U BOLT REAR GUARD set of 2	$18.00
0127	7793	U BOLT NUT	$1.32
6114-36	49180-36	REAR SAFETY GUARD STUD	$8.00
0127	7793	REAR SAFETY GUARD STUD NUT	$1.32
KIT	2682-17	REAR GUARD INSTALATION KIT	$45.00
KIT	2767-10	FRONT GUARD INSTALATION KIT	$23.00

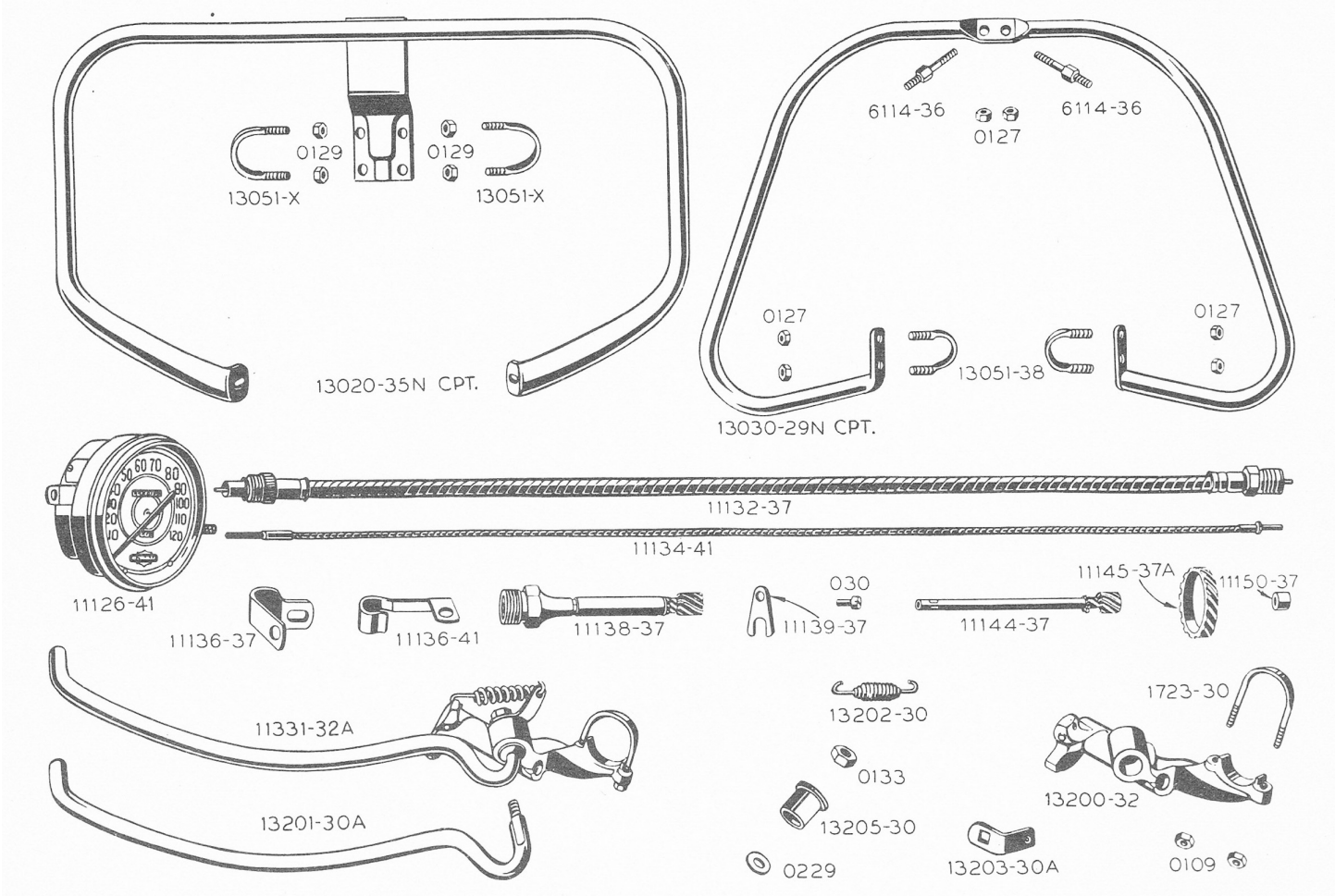

SPEEDOMETER	PARTS		
11126-41	11126-41	SPEEDOMETER MILITARY	$775.00
11132-37	67025-37	CABLE AND CORE	$98.00
11134-41	67057-41	CORE, CABLE DRIVE	$20.00
11136-37	67074-36	SPEEDOMETER CABLE CLIP	$6.00
11136-41	67076-41	SPEEDOMETER CABLE BRACKET	$10.00
11138-37	67126-37	SPEEDOMETER GEAR GRIVE UNIT COMPLETE	$42.00
11139-37	67080-37	DRIVE UNIT RETAINER	$5.00
030	1187	RETAINER SCREW	$0.50
11144-37	67130-37	DRIVE GEAR AND SHAFT	N/A
11145-37A	67155-37	SPEEDOMETER DRIVE GEAR ON BRAKE SHELL	$16.00
11150-37	67139-37	HOUSING COLLAR	N/A
JIFFY STAND &	PARTS		
11331-32A	50002-32	JIFFY STAND COMPLETE	$175.00
13200-32	50045-32	LEG BRACKET	$100.00
13201-30A	50060-30	LEG	$68.00
13202-30	50012-30	SPRING FOR LEG	$12.00
13203-30A	50035-30	SPRING PLATE	$14.00
13205-30	50092-30	LEG BUSHING	$19.00
12305-30OS	50092-30/OS	LEG BUSHING OVER SIZE	$22.00
0133	7835	LEG NUT	$1.42
0229	6473	LEG WASHER	$0.42
1732-30	50110-30	U BOLT	$11.00
0109	7695	U BOLT NUT	$2.00
KIT	2653-5	JIFFY STAND LEG BRACKET MOUNTING U-BOLT KIT Parkerized	$12.00

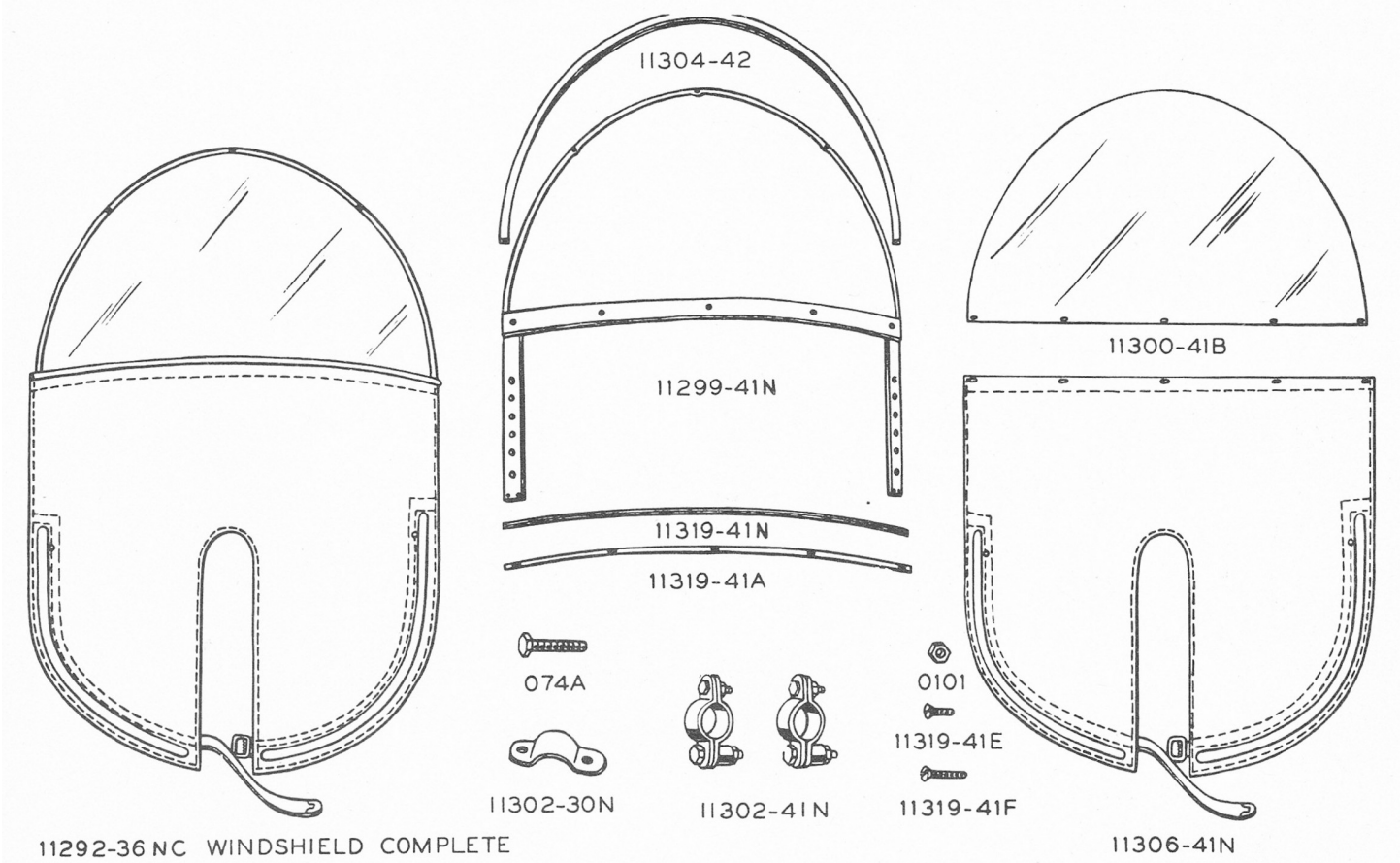

11292-36 NC WINDSHIELD COMPLETE

WINDSHIELDS			
11362-36N	11362-36N	COMPLETE MILITARY OD GREEN CANVAS LOWER	$325.00
11362-36SIL	11362-36SIL	COMPLETE CIVILIAN SILVER CANVAS LOWER	$325.00
11362-36BLK	11362-36BLK	COMPLETE CIVILIAN BLACK CANVAS LOWER	$325.00
0101	7590	MOULDING SCREW NUT	N/A
074A	4032	HEX BOLT FOR CLAMPS	$6.00
0117	7752	NUT FOR EYE BOLT	$1.10
066	4000	SMALL BOLT FOR CLAMPS	$2.10

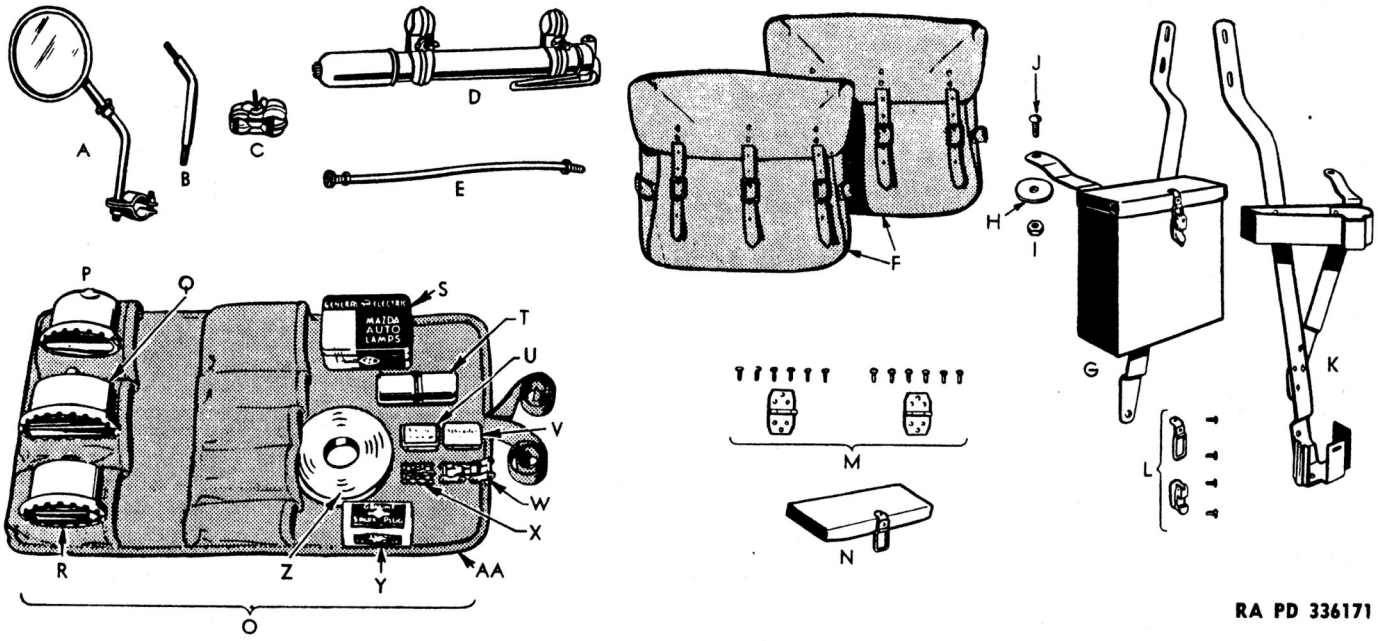

FIGURE 18-4— AMMUNITION BOX AND MISCELLANEOUS GROUP

SADDLEBAGS &	AMMUNITION BOX		
A	11350-41M	MIRROR and BRACKET	$65.00
B	11350-41M	BRACKET	$30.00
C	11557-40M	TIRE PUMP CLAMP PAIR	$75.00
D	11555-41M	TIRE PUMP W/OUT CLAMPS	$150.00
E	11555-41	HOSE	N/A
F	11786-XM/PL	SADDLEBAGS MILITARY OIL FINISH	$550.00
F2	11786-XM	SADDLEBAGS BROWN	$550.00
G	11201-42M	AMMUNITION BOX	$175.00
H	11206-42	WASHER	$2.50
I	0111	NUT	$1.00
J	1039-32	SCREW	$5.00
K	11202-42M	MACHINE GUN BRACKET	$195.00
K2	SCABBARD	MACHINE GUN SCABBARD	$230.00
L	11205-42M	LATCH	N/A
M	11204-42M	HING SET	N/A
N	11203-43M	COVER	N/A
O	"The Liberators"	COMPILED BY DAVID SARAFAN	$40.00